TEST REPORT

EN 62680-1-1

Universal Serial Bus interfaces for data and power Part 1-1: Universal Serial Bus interfaces — Common components — USB Battery Charging Specification, Revision 1.2 (TA 14)

Report Reference No.....:	25ZCTB1111003SP
Tested by (name + signature).....:	Wilson Wei
Approved by (name + signature).....:	Jack Yang
Date of issue.....:	2025-11-26
Total number of pages.....	19 pages
Testing Laboratory Name.....:	Shenzhen ZCT Technology Co.,Ltd.
Address..... :	3/F., Building 5, Hongsheng Industrial Zone, Bao'an Road, Xixiang Street, Bao'an District, Shenzhen, Guangdong, China.
Testing location.....:	Same as above
Applicant.....:	Wenzhou Yijie Electric Co., Ltd
Address. .....:	4th Floor, No. 3808 Binhai 3rd Road, Tianhe Street, Longwan District, Wenzhou City, Zhejiang Province, China
Test specification:	
Standard.....:	EN 62680-1-1: 2015
Test procedure.....:	Test report
Non-standard test method……..:	N/A
Test Report Form No.....:	Test report
Test item description.....:	Socket USB
Trade Mark.....:	ETTROIT
Manufacturer.....:	Wenzhou Yijie Electric Co., Ltd 4th Floor, No. 3808 Binhai 3rd Road, Tianhe Street, Longwan District, Wenzhou City, Zhejiang Province, China
Model/Type reference.....:	**MT2401** MT2402,MT3002,LB2401,LB2402,LB3002,LN2401,LN2402, LN3002,LG2401,LG2402,LG3002,EV2401,EV2402,EV3002, AB2401,AB2402,AB3002,AN2401,AN2402,AN3002,AG2401, AG2402,AG3002
Ratings.....:	150-250VAC 50/60Hz 2.1A
Operating condition……:	Continuous

Test item particulars.....:	Socket USB
Temperature by measurement.....:	25℃
Possible test case verdicts:	
- test case does not apply to the test object.....:	N/A
- test object does meet the requirement.....:	P (Pass)
- test object does not meet the requirement.....:	F (Fail)
Testing:	
Date of receipt of test item.....:	2025-11-11
Date (s) of performance of tests .....:	2025-11-11 to 2025-11-26

General remarks:

The test results presented in this report relate only to the object tested.
This report shall not be reproduced, except in full, without the written approval of the Issuing testing laboratory.
"(See Enclosure #)" refers to additional information appended to the report.
"(See appended table)" refers to a table appended to the report.
Throughout this report a comma (point) is used as the decimal separator.

General product information:

1.Maximum recommended ambient (Tmra): 25°C.
2.Only the model name, the appearance color (the same material) are different, and the rest are the same.

EN 62680-1-1			
Clause	Requirement	Remark	Result
3	**Charging Port Detection**		—
3.1	Overview		P
	Figure 3-1 shows several examples of a PD attached to an SDP or Charging Port.	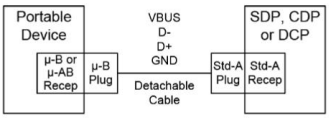	
3.2	Charger Detection Hardware		
	This section briefly describes the hardware used to do charger detection. The following sections provide more details of its operation.		P
3.2.1	Figure 3-2 shows the charger detection hardware for a PD	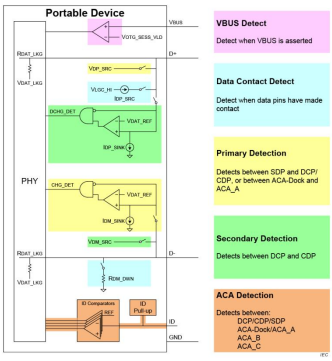 Figure 3-2 – Charger Detection Hardware	P
3.2.2	VBUS Detect		P
	Each PD shall have a session valid comparator that detects when VBUS is greater than its internal session valid threshold. Its internal session valid threshold shall be within VOTG_SESS_VLD .		P
3.3	Data Contact Detect		P
	Data Contact Detect (DCD) uses a current source, I DP_SRC , to detect when the data pins have made contact during an attach event. A PD is not required to implement DCD. If a PD does not implement DCD, then it shall wait a time of T DCD_TIMEOUT min after the attach event before starting Primary Detection.		P
	DCD is able to detect data pin contact whenever a PD is attached to an SDP or CDP. The primary benefit of DCD is that it allows a PD to start Primary Detection as soon as the data pins have made contact, and then connect, without having to wait for a timer to expire. As per the USB Connect Timing ECN, a powered up USB device is required to connect to a USB host within T SVLD_CON_PWD of the attach event.		P
	DCD is also able to detect data pin contact for most cases of a PD attached to a DCP or ACA. Cases where DCD may not work include:		P
	• DCP with too much leakage current		P
	• ACA with charger and FS or HS B-device on Accessory Port		N/A

EN 62680-1-1			
Clause	Requirement	Remark	Result
	• ACA-Dock		N/A
	• PS2 port that pulls D+ high		P
	• Proprietary chargers that pull D+ high		P
	Since DCD does not work in all cases, a PD is required to proceed to Primary Detection within T DCD_TIMEOUT max after the attach event if pin contact has not been detected on the D+ or ID pins. See Section 3.3.2.		P
3.2.3.2	Problem Description		P
	USB plugs and receptacles are designed such that when the plug is inserted into the receptacle, the power pins make contact before the data pins make contact. This is illustrated in Figure 3-3.	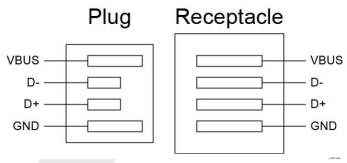	P
3.2.3.3	Data Contact Detect, Not Attached		P
	Figure 3-4 shows the case where the PD is not attached to a remote device.	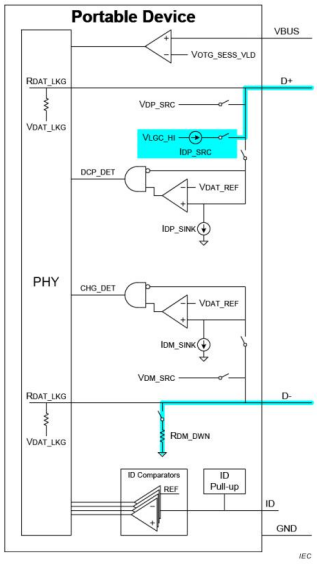 Figure 3-4 – Data Contact Detect, Not Attached	P
	The protocol for Data Contact Detect is as follows:		P
	• PD detects VBUS asserted		P
	• PD turns on IDP_SRC and the D- pull-down resistor		P
	• PD waits for D+ line to be low for a time of TDCD_DBNC		P
	• PD turns off IDP_SRC and D- pull-down resistor		P
3.2.3.4	Data Contact Detect, Standard Downstream Port		P

EN 62680-1-1			
Clause	Requirement	Remark	Result
	Figure 3-5 shows the case where the PD is attached to an SDP.	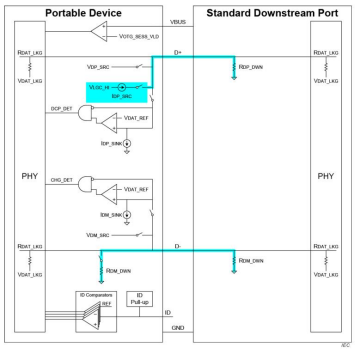 Figure 3-5 – Data Contact Detect, Standard Downstream Port	N/A
3.2.4	Primary Detection		N/A
	Primary Detection is used to distinguish between an SDP and different types of Charging Ports. A PD is required to implement Primary Detection		P
3.2.4.1	Primary Detection, DCP		N/A
	Figure 3-6 shows how Primary Detection works when a PD is attached to a DCP	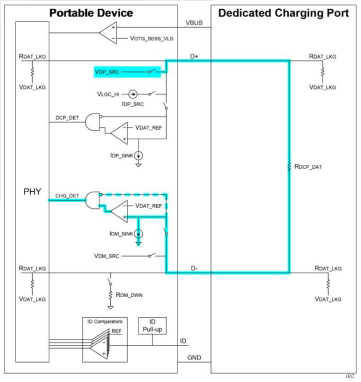 Figure 3-6 – Primary Detection, DCP	P
3.2.4.2	Primary Detection, CDP		P
	Figure 3-7 shows how Primary Detection works when a PD is attached to a CDP	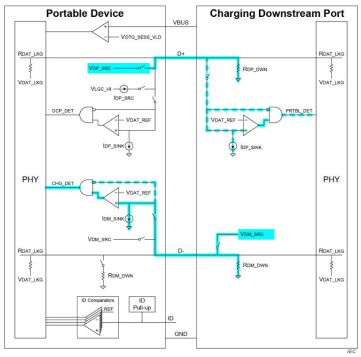 Figure 3-7 – Primary Detection, CDP	P
3.2.4.3	Primary Detection, SDP		P

EN 62680-1-1			
Clause	Requirement	Remark	Result
	Figure 3-8 shows how Primary Detection works when a PD is attached to an SDP	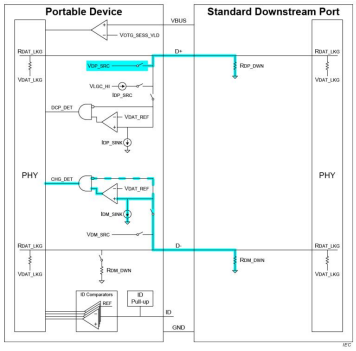 Figure 3-8 – Primary Detection, SDP	P
3.2.4.4	Primary Detection, ACA-Dock		P
	Figure 3-9 shows how Primary Detection works when a PD that supports ACA Detection is attached to an ACA-Dock	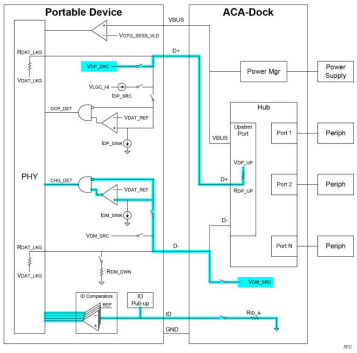 Figure 3-9 – Primary Detection, ACA-Dock	P
	An ACA-Dock is a docking station that has one upstream port, and zero or more downstream ports. The upstream port can be attached to a PD, and is capable of sourcing I CDP to the PD.		P
	When an ACA-Dock is powered, but nothing is attached to its upstream port, it is required to bias the pins on its upstream port as follows:		P
	• VBUS V CHG		P
	• D+ V DP_UP		P
	• D- V DM_SRC		P
	• ID R ID_A		P
	• GND GND		P
3.2.4.5	Primary Detection, Micro ACA		P
	Figure 3-10 shows how Primary Detection works when a PD that supports ACA Detection is attached to a Micro ACA	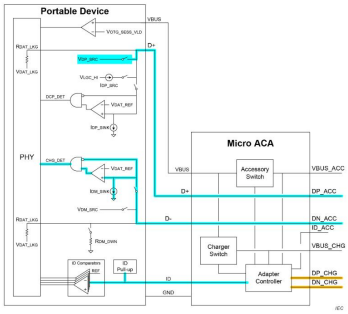 Figure 3-10 – Primary Detection, ACA	P

EN 62680-1-1			
Clause	Requirement	Remark	Result
3.2.5	Secondary Detection		P
	Secondary Detection can be used to distinguish between a DCP and a CDP. PDs that are not ready to be enumerated within TSVLD_CON_PWD of detecting VBUS are required to implement Secondary Detection. PDs that are ready to be enumerated are allowed to bypass Secondary Detection. See Section 3.3.2 on Good Battery Algorithm.		P
3.2.5.1	Secondary Detection, DCP		P
	Figure 3-11 shows how Secondary Detection works when a PD is attached to a DCP	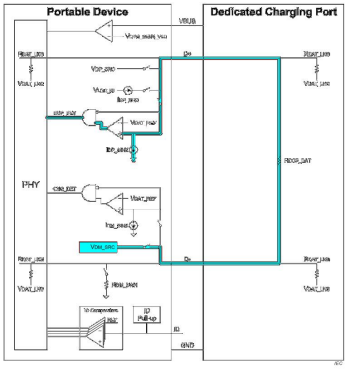 Figure 3-11 – Secondary Detection, DCP	P
3.2.5.1	Secondary Detection, CDP		P
	Figure 3-12 shows how Secondary Detection works when a PD is attached to a CDP	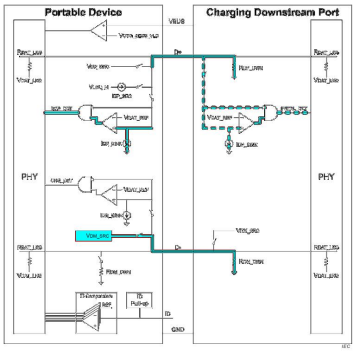 Figure 3-12 – Secondary Detection, CDP	P
3.2.6	ACA Detection		P
	ACA Detection allows a PD to detect when it is attached to an ACA, and to detect what type of device is attached to the ACA Accessory Port. See Section 6 for a description of the ACA.		P
	A PD is not required to support ACA Detection. Only PDs that have a Micro-AB receptacle can support ACA Detection, since the ACA OTG Port has a captive cable terminating in a Micro-A plug.		P
	PDs that support ACA Detection are required to implement the Good Battery Algorithm defined in Section 3.3.2.		P

EN 62680-1-1			
Clause	Requirement	Remark	Result
	Figure 3-13 shows how ACA Detection works when a PD is attached to a Micro ACA	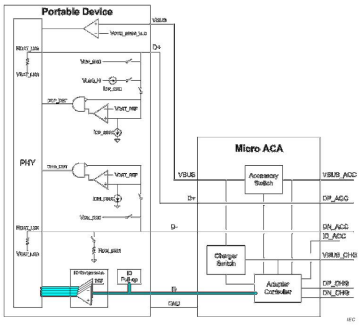 Figure 3-13 – ACA Detection	P
3.3	Charger Detection Algorithms		P
3.3.1	Weak Battery Algorithm		P
	Figure 3-14 shows an example charger detection algorithm for a PD with a Weak Battery. Other algorithms are allowed, providing they comply with the DBP	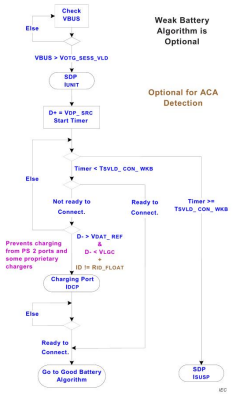 Figure 3-14 – Weak Battery Algorithm	P
3.3.2	Good Battery Algorithm		P
	Figure 3-15 shows the charger detection algorithm that a PD with a Good Battery is required to implement. It may also be used by a PD with a Weak Battery, subject to meeting the requirements of the Dead Battery Provision	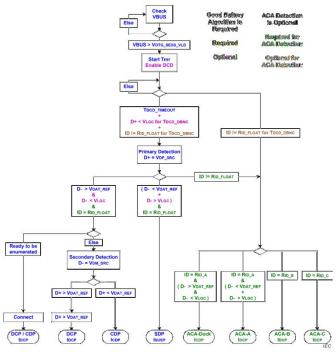 Figure 3-15 – Good Battery Algorithm	P
	Thus a PD, having reached the bottom of the flow chart may in all cases, with the exception of the DCP/CDP exit, delay for up to T SVLD_CON_WKB before connecting or applying a bus reset as appropriate.		P
3.4	Charger Detection Timing		P
3.4.1	Data Contact Detect Timing		P
	To initiate Data Contact Detect, the PD shall enable I DP_SRC and either I DM_SINK or R DM_DWN . When the PD detects that the D+ line has been low		P

EN 62680-1-1			
Clause	Requirement	Remark	Result
	for a time of T DCD_DBNC , then the PD knows that the data pins have made contact.		
	Figure 3-16 shows the timing associated with Data Contact Detect (DCD) when pins make contact after DCD starts	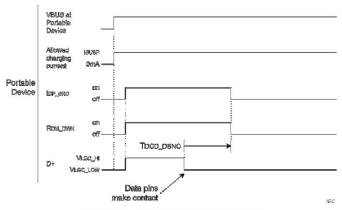 Figure 3-16 – DCD Timing, Contact After Start	P
	Figure 3-17 shows the timing associated with Data Contact Detect when pins have made contact before DCD starts	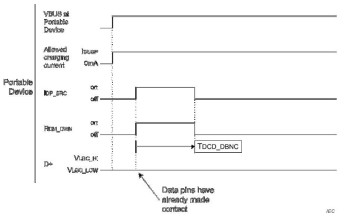 Figure 3-17 – DCD Timing, Contact Before Start	P
	Figure 3-1 8 shows the timing associated with Data Contact Detect when contact is not detected	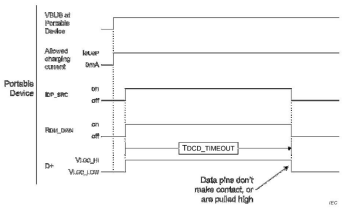 Figure 3-18 – DCD Timing, No Contact	P
3.4.2	Detection Timing, CDP		P
	Figure 3-1 9 shows the timing associated with Primary and Secondary Detection when a PD is attached to a CDP, for the case where the CDP compares D+ to VDAT_REF and VLGC , and enables V DM_SRC accordingly. ACDP is also allowed to leave V DM_SRC enabled while a remote device is not connected. See Section 3.2.4.2 for more details	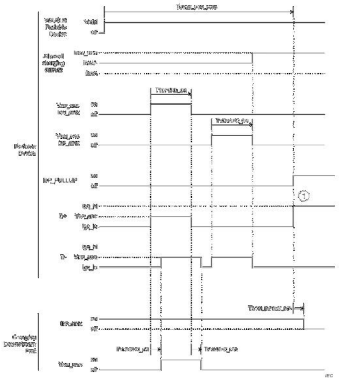 Figure 3-19 – Detection Timing, CDP	P
3.5	Ground Current and Noise Margins		P
	As shown in Figure 7-47 of the USB 2.0 specification, a current of 1 00 mA through the ground wire of a USB cable can result in a voltage difference of 25 mV between the host ground and the device ground. This ground difference has the effect of reducing noise margins for both signaling and charger detection.		P
4	Charging Port and Portable Device Requirements		P
	This section describes the requirements for the following:		P

EN 62680-1-1			
Clause	Requirement	Remark	Result
	• Charging Downstream Port (CDP)		P
	• ACA-Dock		P
	• Dedicated Charging Port (DCP)		P
	• Accessory Charger Adapter (ACA)		P
	• Portable Device (PD)		P
4.1	Charging Port Requirements		P
	The following requirements apply to all types of Charging Ports, including CDP, ACA-Dock, DCP and ACA.		P
4.1.1	Overshoot		N/A
	The output voltage of a Charging Port shall not exceed V CHG_OVRSHT for any step change in load current, nor when the Charging Port is powered on or off.		P
4.1.2	Maximum Current		P
	The output current of a Charging Port shall not exceed I CDP max under any condition.		P
4.1.3	Detection Renegotiation		P
	A downstream port is allowed to act as an SDP, CDP or DCP, and to change between these roles. In order to force an attached PD to repeat the charging detection procedure, a downstream port is required to:		P
	• stop driving VBUS		P
	• allow VBUS to drop to less than VBUS_LKG		P
	• wait for a time of TVBUS_REAPP		P
	• start driving VBUS		P
4.1.4	Shutdown Operation		P
	If the current drawn by a PD causes a Charging Port to go outside of its Required Operating Range, then the Charging Port is allowed to shut down. All types of shut down are allowed outside the Required Operating Range of a Charging Port, including:		P
	• Turning off VBUS		P
	• Constant current limiting		P
	• Foldback current limiting		P
4.1.5	Failure Voltage		P
	The output voltage of a Charging Port shall remain within V CHG_FAIL for any single point failure in the		P

EN 62680-1-1			
Clause	Requirement	Remark	Result
	Charging Port.		
4.1.6	Multiple Ports		P
	For a device with multiple Charging Ports, each Charging Port shall stay within its Required Operating Range regardless of the operation of the other Charging Ports.		P
4.2	Charging Downstream Port		P
	The following requirements apply to a CDP.		P
4.2.1	Required Operating Range		P
	A CDP shall output a voltage of V CHG for all currents less than I CDP min. The voltage on VBUS is averaged over a time of T VBUS_AVG . For load currents greater than I CDP min, a CDP is allowed to shut down. Once in shutdown, the requirements in Section 4.1 .4 apply.		P
	Figure 4-1 shows several example load curves for a CDP. Load curves are required to cross the line at I CDP min within a voltage range of V CHG . Load curves that cross the line at V CHG min for currents less than I CDP min are not allowed	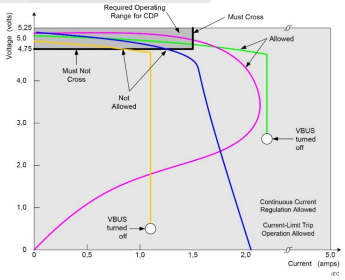 Figure 4-1 – CDP Required Operating Range	P
4.2.2	Shutdown Operation		P
	If a CDP goes into shutdown during a current overload condition, it shall recover and output a voltage of V CHG within a time of T SHTDWN_REC when the current overload condition has been removed		P
4.2.3	Undershoot		P
	The output voltage of a CDP shall be within V CHG_UNDSHT for any step change in load currents that are less than ICDP min.		P
4.2.4	Detection Signaling		P
	A CDP is required to behave in either one of two ways when a remote device is not connected to it. The first way that a CDP is allowed to behave is to enable V DM_SRC within T CP_VDM_EN of a disconnect, and then disable V DM_SRC within T CP_VDM_DIS of a connect. When using this option, a CDP is not required to enable I DP_SINK , or to compare D+ to V DAT_REF		P
4.2.5	Connector		P
	A CDP shall have a Standard-A receptacle.		P

EN 62680-1-1			
Clause	Requirement	Remark	Result
4.3	ACA-Dock		P
	The following requirements apply to the upstream port of an ACA-Dock.		P
4.3.1	Required Operating Range		P
	An ACA-Dock shall have the same Required Operating Range as a CDP.		P
4.3.2	Undershoot		P
	An ACA-Dock shall comply with the same undershoot requirements as a CDP.		P
4.3.3	Detection Signaling		P
	When a PD is attached to an ACA-Dock, the PD acts as host while drawing current from VBUS. This is similar to the case where a PD is attached to an ACA with a peripheral on the Accessory Port.		P
4.3.4	Connector		P
	An ACA-Dock shall have a Micro-A plug that can be mated to the Micro-AB receptacle of a PD.		P
4.4	Dedicated Charging Port		P
	The following requirements apply to a DCP.		N/A
4.4.1	Required Operating Range		P
	A DCP shall output a voltage of V CHG for all currents less than I DCP min. The voltage on VBUS is averaged over a time of T VBUS_AVG .		P
4.4.2	Undershoot		P
	For step changes in load current from I DCP_LOW to I DCP_MID , or from I DCP_MID to I DCP_HI , the undershoot voltage of a DCP shall be V CHG_UNDSHT . DCPs are required to meet this requirement for load steps from mid to hi that occur T DCP_LD_STP after the transition from low to mid. The duration of the undershoot shall be T DCP_UNDSHT		P
	For step changes in load current from I DCP_LOW to I DCP_HI , the output voltage of a DCP is allowed to drop to the load voltage of the attached PD for a time of T DCP_UNDSHT . After this time, the output voltage of a DCP shall be at V CHG for load currents less than I DCP min.		P
4.4.3	Detection Signaling		P
	A DCP shall have an impedance between D+ and D- of RDCP_DAT .		P
4.4.4	Connector		P

EN 62680-1-1			
Clause	Requirement	Remark	Result
	A DCP shall have a Standard-A receptacle, or a captive cable terminated with a Micro-B plug.		P
4.5	Accessory Charger Adapter		P
	The following requirements apply to an ACA with a DCP or CDP on its Charger Port.		P
4.5.1	Required Operating Range		P
	The Required Operating Range for the OTG Port of an ACA is affected by the following factors:		P
	• Device on Charger Port (DCP or CDP)		P
	• Current drawn from Accessory Port		P
	• RACA_CHG_OTG		P
	• VACA_OPR		P
4.5.2	Undershoot		P
	An ACA with a DCP or CDP on its Charger Port shall comply with the same undershoot requirements as a DCP.		P
4.5.3	Detection Signaling		P
	An ACA shall pull the ID pin of the OTG port to ground through one of the following resistances, as specified in Section 6:		N/A
	• RID_GND , RID_C , RID_B , RID_A , RID_FLOAT		P
	An ACA shall connect the data pins of the OTG Port directly to the data pins of the Accessory Port.		P
4.5.4	Connector		P
	An ACA shall have a captive cable terminated with a Micro-A plug on its OTG Port.		P
4.6	Portable Device		P
	The following requirements apply to a PD.		P
4.6.1	Allowed Operating Range		P
	A PD shall not draw more than I DEV_CHG max from a Charging Port. A PD shall not pull the output voltage of a Charging Port below V DCP_SHTDWN max. Figure 4-3 shows the Allowed Operating Range for a PD.	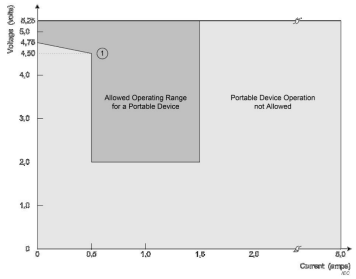 Figure 4-3 – Portable Device Allowed Operating Range	P
4.6.2	Detection Signaling		P
	All PDs shall implement the following detection		P

EN 62680-1-1			
Clause	Requirement	Remark	Result
	features:		
	• DCD timer (T DCD_TIMEOUT)		P
	• Primary Detection – To detect between DCP, CDP and SDP – Compare D- to V DAT_REF during Primary Detection		P
	PDs are allowed, but not required, to implement the following detection features:		P
	• DCD, using I DP_SRC		P
	• Compare D- to V LGC during Primary Detection		P
	• Secondary Detection		P
	• ACA Detection		P
4.6.3	Detection Renegotiation		P
	To restart the charger detection procedure, a downstream port is allowed to remove and then re-assert power on VBUS. See Section 4.1 .3. In order to detect this drop in VBUS, a PD shall discharge VBUS to less than V BUS_LKG within T VLD_VLKG whenever VBUS is removed.		P
4.6.4	Connector		P
	A PD that mates with an ACA-Dock or ACA shall have a Micro-AB receptacle.		P
5	Parameter Values		P
	This section lists the values of parameters defined in this specification.		P
6	Accessory Charger Adapter		P
6.1	Introduction		P
	As PDs get smaller, it becomes more desirable for the PD to only have one external connector. If the only connector a device has is a USB connector, then a problem arises when the user wants to attach the device to a charger at the same time as it is already attached to something else.		P
6.2	Micro ACA		P
6.2.1	Micro ACA Ports		P
	Figure 6-2 shows the ports of a Micro ACA		P
	Various cables can be uses to attach the Accessory Port of a Micro ACA to an accessory, including:		P
	• Micro-A to Micro-B		P

EN 62680-1-1			
Clause	Requirement	Remark	Result
	• Micro-A to captive		P
	• Micro-B to Standard-A		P
	• Micro-B to Micro-A		P
	A Micro ACA shall have one of the following mechanical interfaces for its Charger Port:		P
	• Micro-B receptacle		P
	• Captive cable terminating in a Standard-A plug		P
	• Captive cable terminating in a charger		P
6.2.2	Micro ACA Connectivity Options		P
	Table 6-1 shows the different combinations of devices that can be attached to each Micro ACA port, and provides comments on their operation		P
6.2.3	Micro ACA Architecture		P
	Figure 6-3 shows the architecture of a Micro ACA	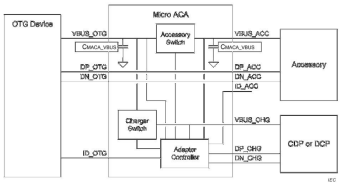 Figure 6-3 – Micro ACA Architecture	P
	The Accessory Switch allows current to flow between VBUS_OTG and VBUS_ACC. The Charger Switch allows current to flow from VBUS_CHG and VBUS_OTG. The Adapter Controller performs several functions. These functions include:		P
	• sensing the state of the ID_ACC pin, (grounded or floating)		P
	• outputting a state onto the ID_OTG pin, (R ID_GND , RID_A , RID_B , RID_C or RID_FLOAT)		P
	• using the DP_CHG and DN_CHG pins to detect if a Charging Port is attached to the Charger Port		P
	• sensing the voltage on the VBUS_ACC pin		P
	• sensing the voltage on the VBUS_OTG pin		P
	• controlling the Charger and Accessory Switches		P
6.2.4	Micro ACA Modes of Operation		P
	The operation of the Micro ACA is shown in Table 6-2, and is described below. The table assumes that an OTG device is always attached to the OTG Port.		P
6.2.5	Implications of not Supporting Micro ACA Detection		P

EN 62680-1-1			
Clause	Requirement	Remark	Result
	The OTG supplement only defines the floating and ground states on the ID pin. The floating state is any impedance greater than 1 M, and the ground state is any impedance less than 10Ω. Since the R ID_A , R ID_B and R ID_C resistances are between the floating and ground resistance values, an OTG device that does not support ACA detection could interpret any of these values as either floating or ground.		P
6.2.6	Micro ACA Requirements		P
	A Micro ACA Charger Port shall draw less than I SUSP when anything other than a Charging Port is attached to it.		P
6.2.7	Portable Device State Diagram		P
	Figure 6-4 shows the state diagram for a PD attached to an SDP, CDP, DCP, Micro ACA, ACA-Dock or B-device		P
6.3	Standard ACA		P
6.3.1	Standard ACA Ports		P
	Figure 6-5 shows the ports of a Standard ACA	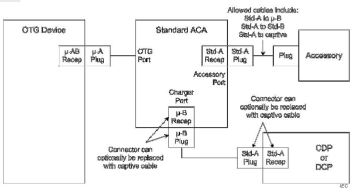 Figure 6-5 – Standard ACA Ports	P
	Various cables can be uses to attach the Accessory Port of a Standard ACA to an accessory,including:		P
	• Standard-A to Micro-B		P
	• Standard-A to Standard-B		P
	• Standard-A to captive		P
	A Standard ACA shall have one of the following mechanical interfaces for its Charger Port:		P
	• Micro-B receptacle		P
	• Captive cable terminating in a Standard-A plug		P
	• Captive cable terminating in a charger		P
6.3.2	Standard ACA Architecture		P
	Figure 6-6 shows the architecture of a Standard ACA	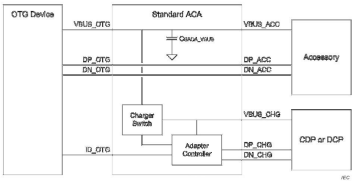 Figure 6-6 – Standard ACA Architecture	P

EN 62680-1-1			
Clause	Requirement	Remark	Result
6.3.3	Standard ACA Modes of Operation		P
	The operation of the Standard ACA is shown in Table 6-4, and is described below. The table assumes that an OTG device is always attached to the OTG Port.	Table 6-4 – Standard ACA Modes of Operation Row: 1, Charger Port: non-charger, Accessory Port: nothing, Charger Switch Note 1: open, ID_OTG: R_{ID_GND}, OTG Device: A-dev Row: 2, Charger Port: non-charger, Accessory Port: B-device, Charger Switch Note 1: open, ID_OTG: R_{ID_GND}, OTG Device: A-dev Row: 3, Charger Port: charger, Accessory Port: nothing, Charger Switch Note 1: closed, ID_OTG: R_{ID_A}, OTG Device: A-dev Row: 4, Charger Port: charger, Accessory Port: B-device, Charger Switch Note 1: closed, ID_OTG: R_{ID_A}, OTG Device: A-dev NOTE 1 Open refers to the high impedance state of the switch. Closed refers to the low impedance state of the switch.	P
6.3.4	Implications of not Supporting Standard ACA Detection		P
	The OTG supplement only defines the floating and ground states on the ID pin. The floating state is any impedance greater than 1 M, and the ground state is any impedance less than 10 Ω. Since the R ID_A is between the floating and ground resistance values, an OTG device that does not support ACA detection could intepret this value as either floating or ground.		P
	If an OTG device interpreted the R ID_A resistance as floating, then:		P
	• it would not be aware of the opportunity to draw I DEV_CHG from VBUS,		P
	• it would default to peripheral, when it should default to host.		P
6.3.5	Standard ACA Requirements		P
	A Standard ACA Charger Port shall draw less than I SUSP when anything other than a Charging Port is attached to it.		P
	A Standard ACA Accessory Port shall draw less than I SUSP when a Charging Port is attached to the ACA Charger Port and nothing is attached to the OTG Port or Accessory Port.		P
	The resistance between VBUS_CHG, and either VBUS_OTG or VBUS_ACC of a Standard ACA shall be R ACA_CHG_OTG when the Charger Switch is closed in Table 6-1 , and the voltage on VBUS_CHG is at V ACA_OPR .		P

ANNEX I Photos of Product

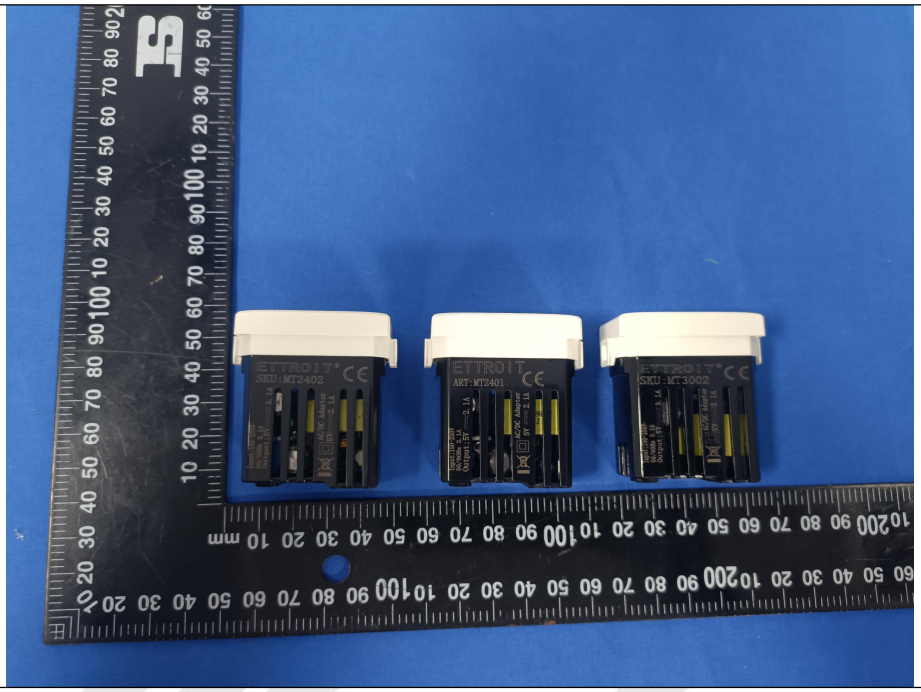

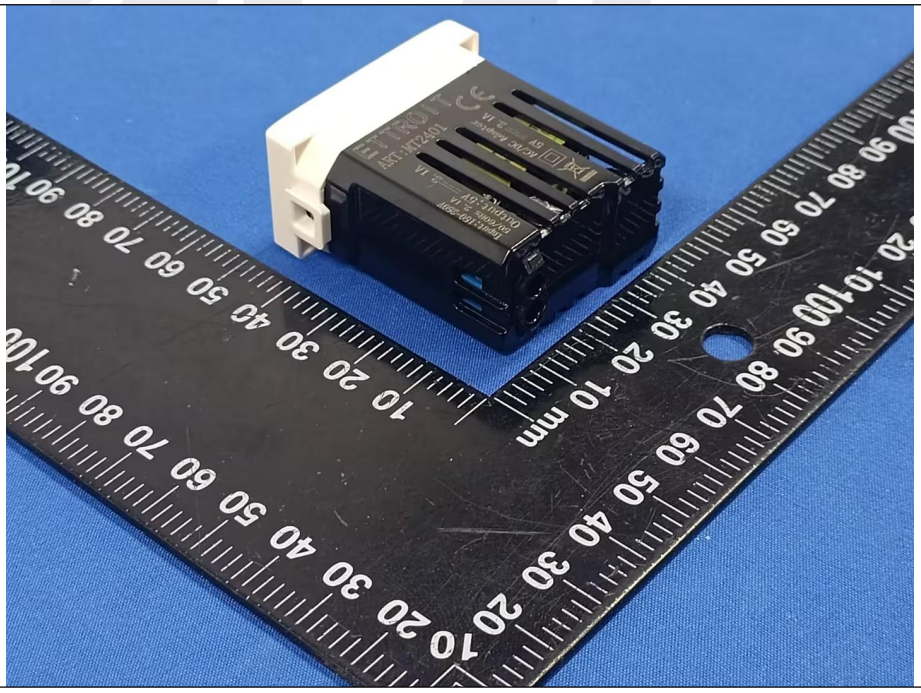

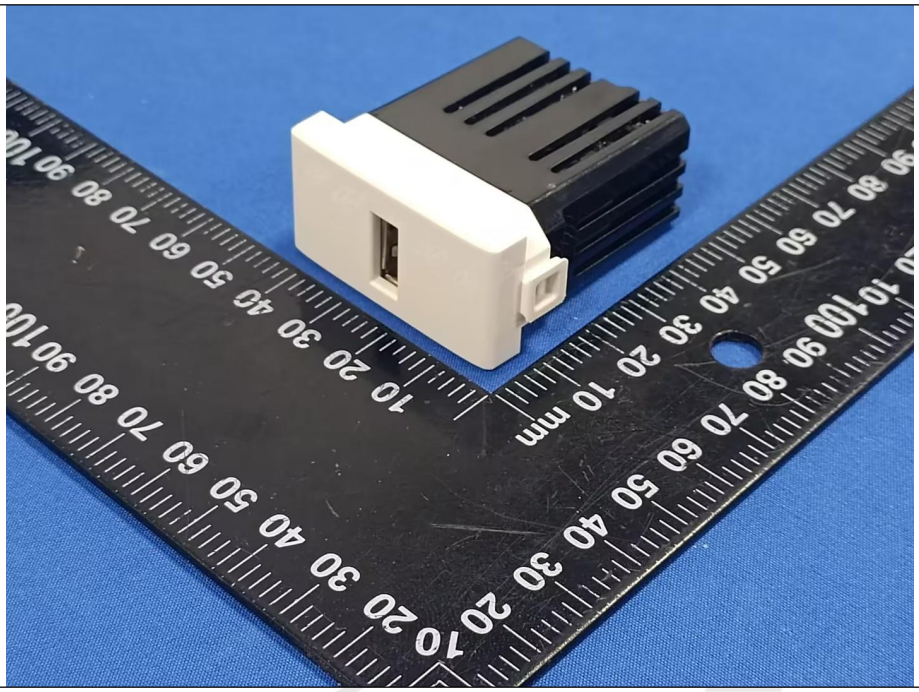

----END---