CE EMC
TEST REPORT

for

Product:Socket

Model:JXDA-05

JX11232,JX11233,JX11234,JX11235,JX11236

Issued for

Wenzhou Yijie Electric Co., Ltd

No. 83, Fengquan Road, Tianhe street, Wenzhou Economic and Technological Development Zone, Wenzhou City, Zhejiang Province

Issued by

Shenzhen ZCT Technology Co.,Ltd.

3/F., Building 5, Hongsheng Industrial Zone, Bao'an Road, Xixiang Street, Bao'an District, Shenzhen, Guangdong, China.

TEL: 400-669-6965

FAX: (86) 755-23702323

Note: This report shall not be reproduced except in full, without the written approval of Shenzhen ZCT Technology Co.,Ltd. This document may be altered or revised by Shenzhen ZCT Technology Co.,Ltd. personnel only, and shall be noted in the revision section of the document. The test results presented in this report only relate to the tested sample.

TABLE OF CONTENTS

1. TEST CERTIFICATION 3
2. TEST SUMMARY 4
3. TEST SITE 5
3.1. TEST FACILITY 5
3.2. LIST OF TEST AND MEASUREMENT INSTRUMENTS 5
4. EUT DESCRIPTION 9
5. TEST METHODOLOGY 10
5.1. TEST MODE 10
5.2. EUT SYSTEM OPERATION 10
6. SETUP OF EQUIPMENT UNDER TEST 11
6.1. DESCRIPTION OF SUPPORT UNITS 11
6.2. CONFIGURATION OF SYSTEM UNDER TEST 11
7. EMISSION TEST 12
7.1. CONDUCTED EMISSION MEASUREMENT 12
7.2. RADIATED EMISSION MEASUREMENT 16
7.3. HARMONICS CURRENT MEASUREMENT 20
7.4. VOLTAGE FLUCTUATION AND FLICKS MEASUREMENT 22
8. IMMUNITY TEST 23
8.1. GENERAL DESCRIPTION 23
8.2. GENERAL PERFORMANCE CRITERIA DESCRIPTION 24
8.3. ELECTROSTATIC DISCHARGE (ESD) 25
8.4. RADIATED, RADIO-FREQUENCY, ELECTROMAGNETIC FIELD (RS) 28
8.5. ELECTRICAL FAST TRANSIENT (EFT) 30
8.6. SURGE IMMUNITY TEST 32
8.7. CONDUCTED RADIO FREQUENCY DISTURBANCES (CS) 34
8.8. POWER FREQUENCY MAGNETIC FIELD 36
8.9. VOLTAGE DIP & VOLTAGE INTERRUPTIONS 39
9. PHOTOGRAPHS OF EUT 41

1. TEST CERTIFICATION

Product:	Socket
Model:	JXDA-05 JX11232,JX11233,JX11234,JX11235,JX11236
Trade Mark:	ETTROIT
Applicant :	Wenzhou Yijie Electric Co., Ltd
Address:	No. 83, Fengquan Road, Tianhe street, Wenzhou Economic and Technological Development Zone, Wenzhou City, Zhejiang Province
Manufacturer:	Wenzhou Yijie Electric Co., Ltd
Address:	No. 83, Fengquan Road, Tianhe street, Wenzhou Economic and Technological Development Zone, Wenzhou City, Zhejiang Province
Test Date:	Sept 11, 2024 to Sept 23, 2024
Issued Date:	Sept 23, 2024
Test Voltage:	250V~; 10/16Hz;16A
Applicable Standards:	EMC Directive 2014/30/EU EN IEC 61000-6-3:2021 EN IEC 61000-6-1:2019 EN 61000-3-2:2014 EN 61000-3-3:2013+A2:2021

The above equipment has been tested by Shenzhen ZCT Technology Co.,Ltd. and found compliance with the requirements in the technical standards mentioned above. The test results presented in this report only relate to the product/system tested. The Other similar equipment will not necessarily produce the same results due to production tolerance and measurement uncertainties.

Test Engineer.

Alex Li / Engineer

Technical Manager.

Tomy Wu / Manager

SHENZHEN ZCT TECHNOLOGY CO.,LTD. TEST APPROVED

2. TEST SUMMARY

EMISSION			
Standard	**Item**	**Result**	**Remarks**
EN IEC 61000-6-3:2021	Conducted emission (Mains Port)	PASS	Meet Class B limit
	Radiated emission	PASS	Meet Class B limit
EN 61000-3-2:2014	Harmonic current emissions	N/A	Not applicable
EN 61000-3-3:2013+A2:2021	Voltage fluctuations & flicker	PASS	Complied with the requirements

IMMUNITY			
Standard	**Item**	**Result**	**Remarks**
EN 61000-4-2:2009	ESD	PASS	Complied with the requirements
EN IEC 61000-4-3:2020	RS	PASS	Complied with the requirements
EN 61000-4-4:2012	EFT	PASS	Complied with the requirements
EN 61000-4-5: 2014+A1:2017	Surge	PASS	Complied with the requirements
EN 61000-4-6: 2014+AC:2015	CS	PASS	Complied with the requirements
EN 61000-4-8:2010	PFMF	N/A	Not applicable
EN IEC61000-4-11: 2020+AC:2020-06	Voltage dips & voltage variations	PASS	Complied with the requirements

Note: 1) The test result verdict is decided by the limit of test standard.

2) The information of measurement uncertainty is available upon the customer's request.

3. TEST SITE

3.1. TEST FACILITY

Shenzhen ZCT Technology Co.,Ltd.
Address: 3/F., Building 5, Hongsheng Industrial Zone, Bao'an Road, Xixiang Street, Bao'an District, Shenzhen, Guangdong, China.

Test Lab: Dongguan Precise Testing & Certification Corp., Ltd.
Address: Building 1, No. 6, Tongxin Road, Dongcheng Street, Dongguan, Guangdong, China.

3.2. LIST OF TEST AND MEASUREMENT INSTRUMENTS

3.2.1. For conducted emission at the mains terminals test

Name of Equipment	Manufacturer	Model	Serial No.	Calibration Due
EMI Test Receiver	Rohde&Schwarz	ESCI	101417	Aug. 19, 2025
Artificial Mains Network	Rohde&Schwarz	ENV216	102453	Aug. 19, 2025
Artificial Mains Network	Rohde&Schwarz	ENV216	101342	Aug. 19, 2025

3.2.2. For radiated emission test (30MHz-1GHz)

Name of Equipment	Manufacturer	Model	Serial No.	Calibration Due
EMI Test Receiver	Rohde&Schwarz	ESCI	101417	Aug. 19, 2025
Bilog Antenna	SCHWARZBECK	VULB 9168	9168-3355	Aug. 21, 2025
Preamplifier (low frequency)	SCHWARZBECK	BBV 9475	9745-0013	Aug. 19, 2025

3.2.3. For radiated emission test (1GHz above)

Name of Equipment	Manufacturer	Model	Serial No.	Calibration Due
EMI Test Receiver	Rohde&Schwarz	ESCI	101417	Aug. 28, 2025
Spectrum Analyzer	Agilent	E4407B	MY45109572	Aug. 28, 2025
Horn Antenna	SCHWARZBECK	9120D	9120D-1246	Aug. 13, 2025
LOW NOISE AMPLIFIER	ZHINAN	ZN3380C	15002	Aug. 19, 2025

3.2.4. For harmonic current emissions and voltage fluctuations/flicker test

Name of Equipment	Manufacturer	Model	Serial No.	Calibration Due
Harmonics / Flicker Test System	California Instruments	CTS/PACS-1-115	1534A00401	Aug. 19, 2025
AC Power Source	California Instruments	3001IX-208-CTS	1534A00401	Aug. 19, 2025

3.2.5. For electrostatic discharge immunity test

Name of Equipment	Manufacturer	Model	Serial No.	Calibration Due
ESD Generator	SCHLODER	SESD216	606137	Aug. 20, 2025

3.2.6. For radio frequency electromagnetic field immunity (R/S) test (DQT)

Name of Equipment	Manufacturer	Model	Serial No.	Calibration Due
Signal Generator	Agilent	N517113-50B	MY53050160	Oct.29, 2025
Amplifier	A&R	150W1000M3	313157	Oct.29, 2025
Amplifier	A&R	50SIG6M2	0342835	Oct.29, 2025
Antenna	SCHWARZBECK	STLP9149	9149.222	Oct.29, 2025
Isotropic Field Probe	A&R	FL7006	0342652	Oct.29, 2025
Log-periodic Antenna	SCHWARZBECK	STLP 9128E	9128E-012	Oct.29, 2025

3.2.7. For electrical fast transient/burst immunity test

Name of Equipment	Manufacturer	Model	Serial No.	Calibration Due
EFT Tester	HTEC	HEFT 51	1416010	Aug. 19, 2025
EFT Coupling Clamp	HTEC	HEFT 51-C	1416011	Aug. 19, 2025

3.2.8. For surge immunity test

Name of Equipment	Manufacturer	Model	Serial No.	Calibration Due
Surge Tester	HTEC	HCWG 71	174302	Aug. 19, 2025
Surge Tester	HTEC	TCOMB 4	142103	Aug. 19, 2025
Surge Tester	HTEC	HTSG 70	175002	Aug. 19, 2025

3.2.9. For injected currents susceptibility test

Name of Equipment	Manufacturer	Model	Serial No.	Calibration Due
C/S Test System	SCHLODER	CDG-6000-25	126A1279/2014	Aug. 19, 2025
Coupling Decoupling Network	SCHLODER	CDN-M2+3	A2210251/2013	Aug. 19, 2025
Electromagnetic Injection Clamp	Luthi	EM101	36041	Aug. 19, 2025

3.2.10. For power frequency magnetic field immunity test

Name of Equipment	Manufacturer	Model	Serial No.	Calibration Due
Magnetic Field Tester	HTEC	HPFMF	142104	Aug. 19, 2025

3.2.11. For voltage dips and short interruptions immunity test

Name of Equipment	Manufacturer	Model	Serial No.	Calibration Due
Dips Tester	HTEC	HV1P16T/HCOMPACT52	170901/190901	Aug. 19, 2025

4. EUT DESCRIPTION

Product	Socket
Model	JXDA-05 JX11232,JX11233,JX11234,JX11235,JX11236
Power Supply	250V~; 10/16Hz;16A
Power	N/A

I/O PORT

I/O PORT TYPES	Q'TY	TESTED WITH
AC Port	1	☒
DC Port	1	☐

Models Difference

N/A

5. TEST METHODOLOGY

5.1. TEST MODE

The EUT was tested together with the thereinafter additional components, and a configuration, which produced the worst emission levels, was selected and recorded in this report.

The following test mode(s) were assessed.

Test Items		Test Mode
Emission	Conducted Emission	Working
	Radiated Emission	Working
	Harmonic current emissions	N/A
	Voltage fluctuations & flicker	Working
Immunity	ESD	Working
	RS	N/A
	EFT	Working
	Surge	Working
	C/S	Working
	M/S	Working
	Dips	Working

5.2. EUT SYSTEM OPERATION

1. Set up EUT with the support equipment.
2. Make sure the EUT work normally during the test.

6. SETUP OF EQUIPMENT UNDER TEST

6.1. DESCRIPTION OF SUPPORT UNITS

The EUT has been tested as an independent unit together with other necessary accessories or support units. The following support units or accessories were used to form a representative test configuration during the tests.

No.	Equipment	Model	Serial No.	FCC ID	Trade Name	Data Cable	Power Cord
1.	N/A	N/A	N/A	N/A	N/A	N/A	N/A

Note: 1) All the equipment/cables were placed in the worst-case configuration to maximize the emission during the test.
2) Grounding was established in accordance with the manufacturer's requirements and conditions for the intended use.

6.2. CONFIGURATION OF SYSTEM UNDER TEST

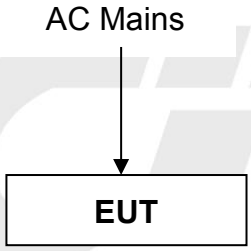

(EUT: Socket)

7. EMISSION TEST

7.1. CONDUCTED EMISSION MEASUREMENT

7.1.1. LIMITS

FREQUENCY (MHz)	Class A		Class B	
	Quasi-peak dB(μV)	Average dB(μV)	Quasi-peak dB(μV)	Average dB(μV)
0.15 - 0.5	79	66	66-56	56-46
0.5 - 5.0	73	60	56	46
5.0 - 30.0	73	60	60	50

Note: 1) The lower limit shall apply at the transition frequencies.
2) The limit decreases in line with the logarithm of the frequency in the range of 0.15 to 0.50 MHz.

7.1.2. TEST PROCEDURES

The EUT and Support equipment, if needed, was set up as per the test configuration to simulate typical usage per the user's manual. When the EUT is a tabletop system, a wooden table with a height of 0.8 meters is used and is placed on the ground plane. When the EUT is floor standing equipment, it is placed on the ground plane, which has a 3-12 mm non-conductive covering to insulate the EUT from the ground plane. The EUT should be 0.8 m apart from the AMN, where the mains cable supplied by the manufacturer is longer than 1 m, the excess should be folded at the centre into a bundle no longer than 0.4 m, Details please refer to test setup photography.

The Receiver scanned from 150 kHz to 30 MHz for emissions in each of the test modes.
During the above scans, the emissions were maximized by cable manipulation.

A scan was taken on both of the power lines, Line and neutral, recording at least the six highest emissions. Emission frequency and amplitude were recorded into a computer in which correction factors were used to calculate the emission level and compare reading to the applicable limit. The test data of the worst-case condition(s) was recorded.

7.1.3. TEST SETUP

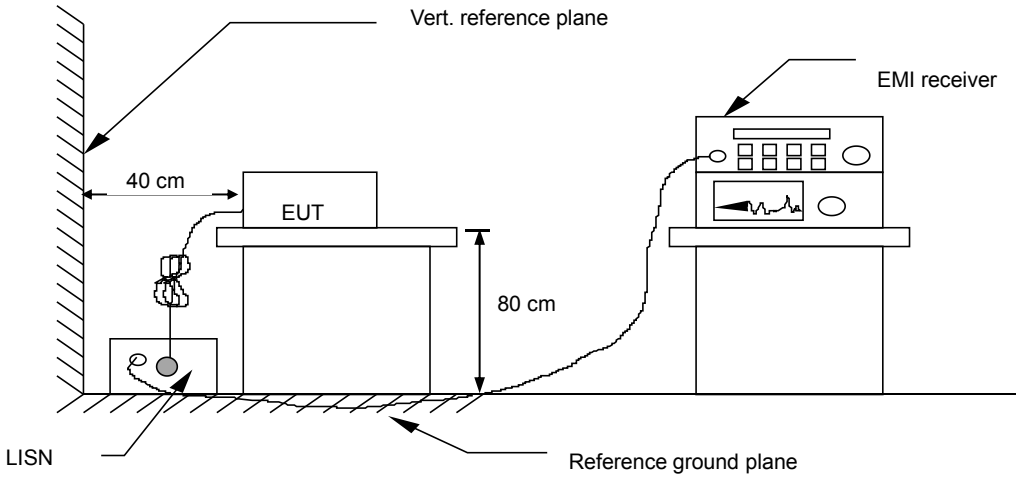

For the actual test configuration, please refer to the related item – Photographs of the Test Configuration.

7.1.4. TEST RESULT

Product name	Socket	Tested By	TZR
Model	JXDA-05	Detector Function	Peak / Quasi-peak/AV
Test Mode	Working	6 dB Bandwidth	9 kHz
Environmental Conditions	24.2℃, 54.5 % RH, 101.1 kPa	Test Result	Pass

Note:
L = Line Line, N = Neutral Line
Freq. = Emission frequency in MHz
Reading level (dBμV) = Receiver reading
Corr. Factor (dB) = attenuator + Cable loss
Level (dBμV) = Reading level (dBμV) + Corr. Factor (dB)
Limit (dBμV) = Limit stated in standard
Over Limit (dB) = Level (dBμV) – Limit (dBμV)
QP = Quasi-Peak
AV = Average

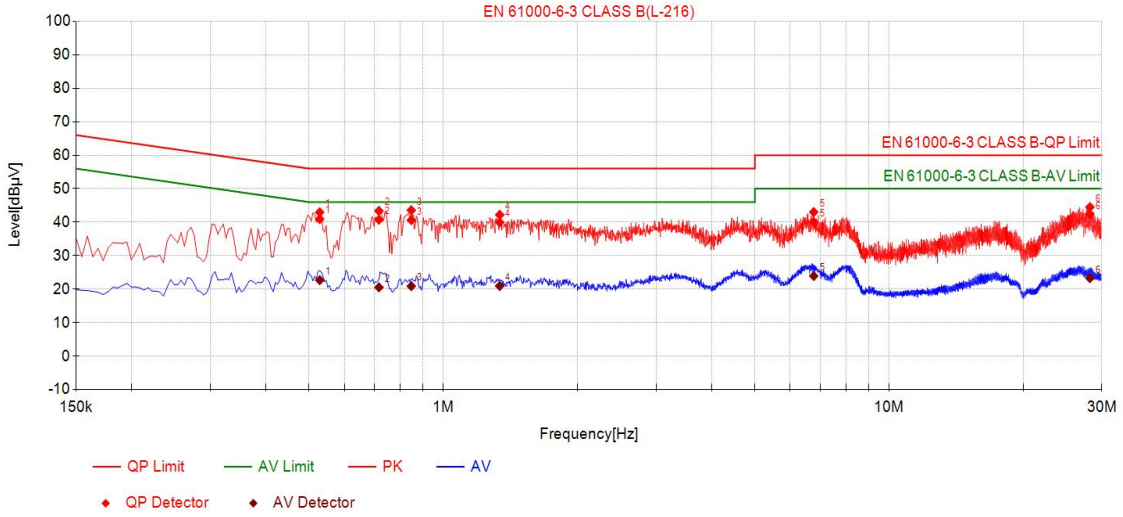

Final test data

NO.	Freq. [MHz]	QP Value [dBµV]	QP Limit [dBµV]	QP Margin [dB]	AV Value [dBµV]	AV Limit [dBµV]	AV Margin [dB]	Verdict
1	0.528	40.91	56.00	15.09	22.68	46.00	23.32	PASS
2	0.717	40.72	56.00	15.28	20.54	46.00	25.46	PASS
3	0.8475	40.62	56.00	15.38	20.89	46.00	25.11	PASS
4	1.338	39.95	56.00	16.05	20.94	46.00	25.06	PASS
5	6.7785	40.05	60.00	19.95	23.92	50.00	26.08	PASS
6	28.23	42.36	60.00	17.64	23.29	50.00	26.71	PASS

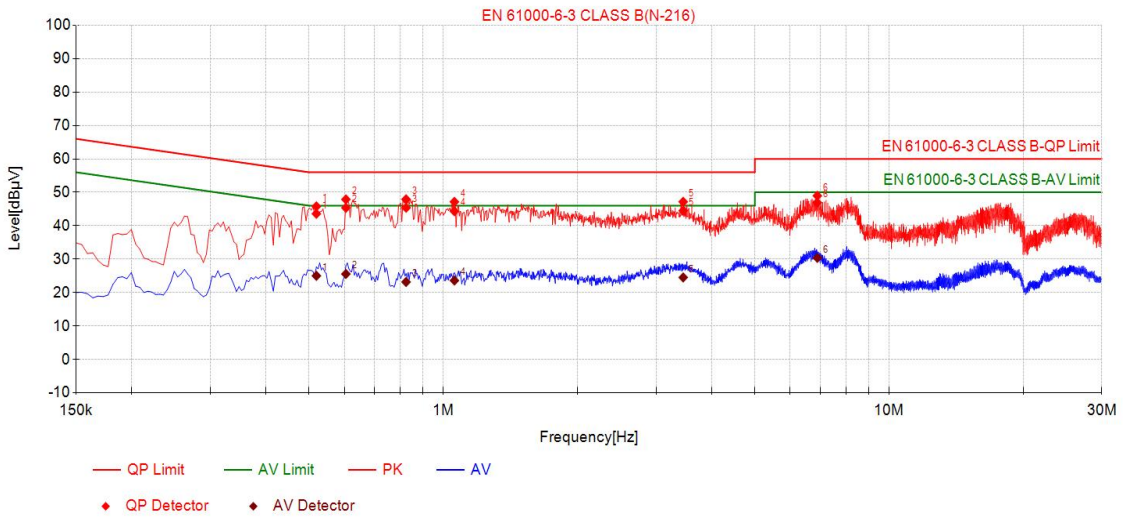

Final test data

NO.	Freq. [MHz]	QP Value [dBµV]	QP Limit [dBµV]	QP Margin [dB]	AV Value [dBµV]	AV Limit [dBµV]	AV Margin [dB]	Verdict
1	0.519	43.58	56.00	12.42	25.01	46.00	20.99	PASS
2	0.6045	45.37	56.00	10.63	25.56	46.00	20.44	PASS
3	0.825	45.39	56.00	10.61	23.17	46.00	22.83	PASS
4	1.059	44.33	56.00	11.67	23.60	46.00	22.40	PASS
5	3.453	44.53	56.00	11.47	24.52	46.00	21.48	PASS
6	6.9045	46.92	60.00	13.08	30.38	50.00	19.62	PASS

7.2. RADIATED EMISSION MEASUREMENT

7.2.1. LIMITS

FREQUENCY (MHz)	Class A(At 3m)	Class B(At 3m)
	Quasi-peak dB(μV/m)	Quasi-peak dB(μV/m)
30 ~ 230	50	40
230 ~ 1000	57	47

Note: 1) The lower limit shall apply at the transition frequencies.
2) Emission level (dBμV/m) = 20 log Emission level (μV/m).

7.2.2. TEST PROCEDURE

The equipment was set up as per the test configuration to simulate typical usage per the user's manual. When the EUT is a tabletop system, a wooden turntable with a height of 0.8 meters is used which is placed on the ground plane. When the EUT is floor standing equipment, it is placed on the ground plane which has a 0.1 m non-conductive covering to insulate the EUT from the ground plane.

The antenna was placed at 3 meter away from the EUT. The antenna connected to the spectrum analyzer via a cable and at times a pre-amplifier would be used.

The analyzer / receiver quickly scanned from 30 MHz to 1000 MHz. The EUT test program was started. Emissions were scanned and measured rotating the EUT to 360 degrees and positioning the antenna 1 to 4 meters above the ground plane, in both the vertical and the horizontal polarization, to maximize the emission reading level.

During the above scans, the emissions were maximized by cable manipulation. Each modes is measured, recorded at least the six highest emissions. The emission frequency, amplitude, antenna position, polarization and turntable position were recorded into a computer in which correction factors were used to calculate the emission level and compare reading to the applicable limit and only Q.P. reading is presented.

The test data of the worst-case condition(s) was recorded.

7.2.3. TEST SETUP

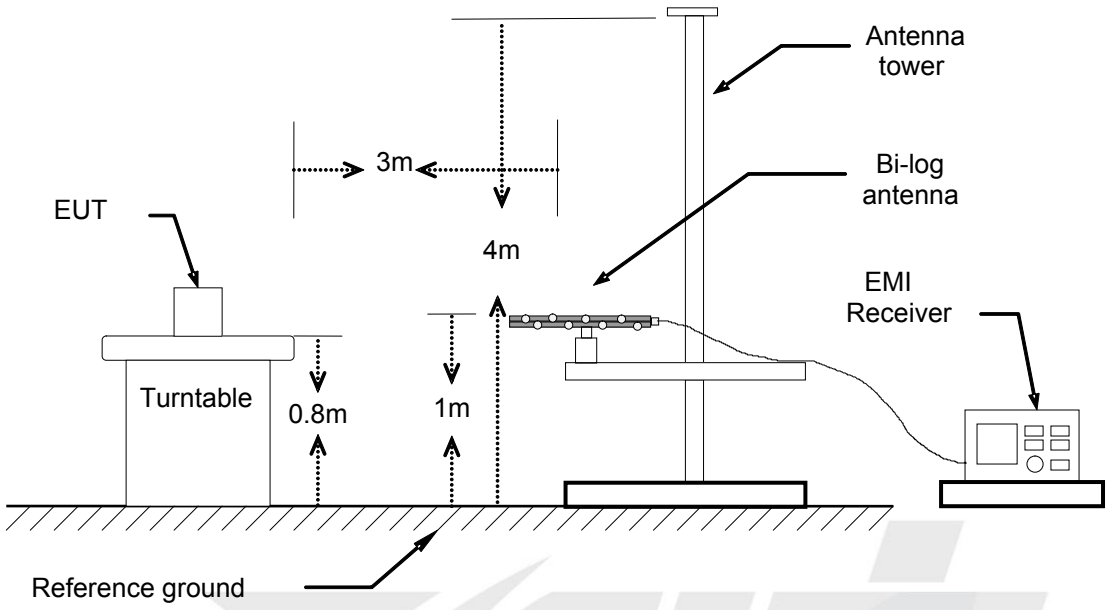

For the actual test configuration, please refer to the related item – Photographs of the Test Configuration

7.2.4. TEST RESULT

Product name	Socket	Antenna Distance	3 m
Model	JXDA-05	Antenna Pole	Vertical / Horizontal
Test Mode	Working	Detector Function	Peak / Quasi-peak
Environmental Conditions	24.1℃, 54.3 % RH, 101.3 kPa	6 dB Bandwidth	120 kHz
Tested by	Yang	Test Result	Pass

Note:
Freq. = Emission frequency in MHz
Reading level (dBμV/m) = Receiver reading
Corr. Factor (dB) = Antenna factor + Cable loss
Measurement (dBμV/m) = Reading level (dBμV/m) + Corr. Factor (dB)
Limit (dBμV/m) = Limit stated in standard
Over Limit (dB) = Measurement (dBμV/m) – Limit (dBμV/m)
QP = Quasi-Peak
The highest frequency of the internal sources of the EUT was less than 108 MHz, so the measurement was only made up to 1 GHz.

Please refer to the following diagram:

Vertical:

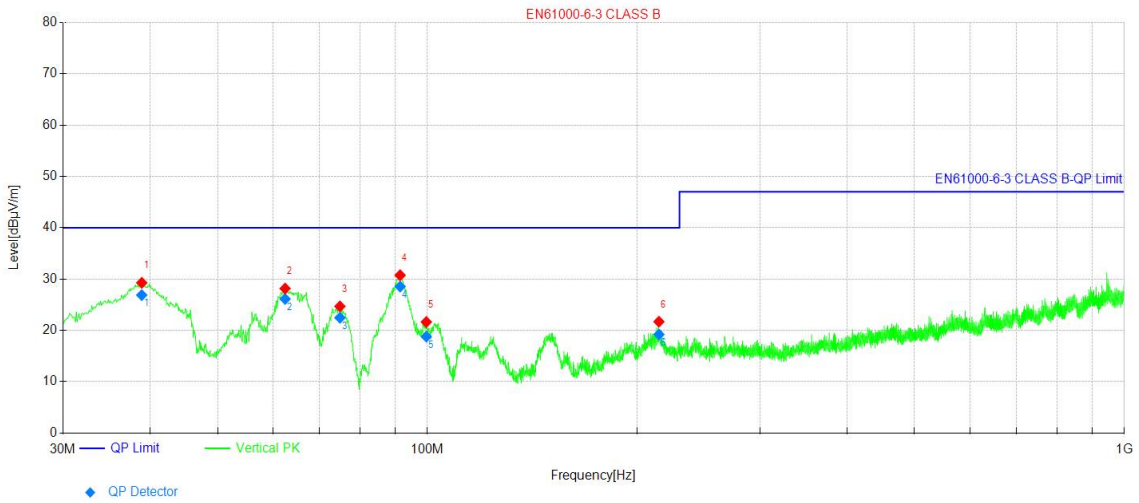

Final Test Data								
NO.	Freq. [MHz]	QP Value [dBµV/m]	QP Limit [dBµV/m]	QP Margin [dB]	Height [cm]	Angle [°]	Polarity	Result
1	38.9249	26.86	40.00	13.14	100	99	Vertical	PASS
2	62.4982	26.10	40.00	13.90	100	29	Vertical	PASS
3	74.9155	22.45	40.00	17.55	100	257	Vertical	PASS
4	91.4071	28.52	40.00	11.48	100	179	Vertical	PASS
5	99.653	18.76	40.00	21.24	100	336	Vertical	PASS
6	214.900	19.18	40.00	20.82	100	275	Vertical	PASS

Horizontal:

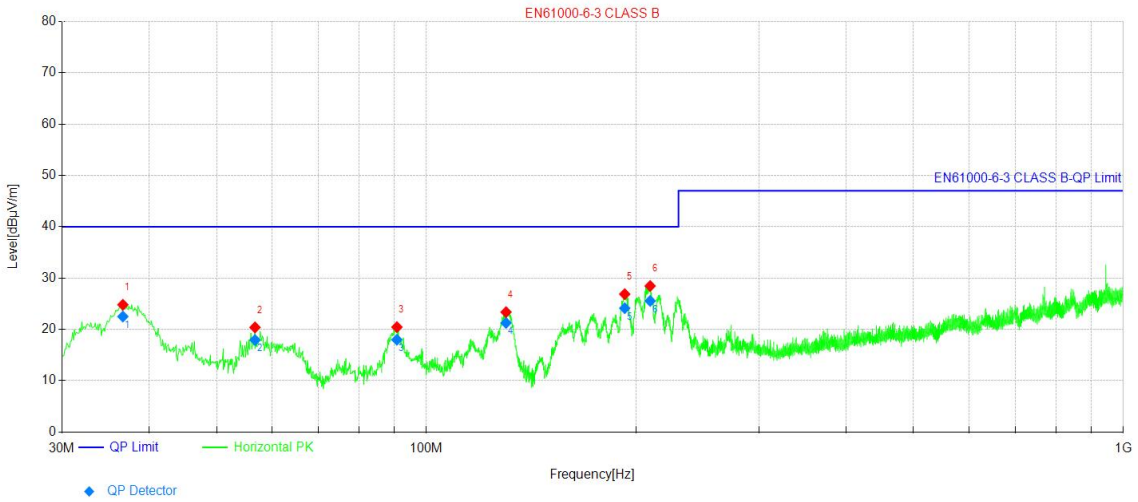

Final Test Data								
NO.	Freq. [MHz]	QP Value [dBµV/m]	QP Limit [dBµV/m]	QP Margin [dB]	Height [cm]	Angle [°]	Polarity	Result
1	36.6937	22.48	40.00	17.52	200	41	Horizont	PASS
2	56.7747	17.90	40.00	22.10	200	253	Horizont	PASS
3	90.7281	17.96	40.00	22.04	200	226	Horizont	PASS
4	130.114	21.24	40.00	18.76	200	24	Horizont	PASS
5	192.588	24.11	40.00	15.89	200	199	Horizont	PASS
6	209.467	25.53	40.00	14.47	200	199	Horizont	PASS

7.3. HARMONICS CURRENT MEASUREMENT

7.3.1. LIMITS OF HARMONICS CURRENT MEASUREMENT

Limit for Class A equipment	
Harmonics Order N	Max. permissible harmonics current A
Odd harmonics	
3	2.30
5	1.14
7	0.77
9	0.40
11	0.33
13	0.21
15≦n≦39	0.15x(15/n)
Even harmonics	
2	1.08
4	0.43
6	0.30
8≦n≦40	0.23x8/n

Limit for Class D equipment		
Harmonics Order n	Max. permissible harmonics current per watt mA/W	Max. permissible harmonics current A
Odd Harmonics only		
3	3.4	2.30
5	1.9	1.14
7	1.0	0.77
9	0.5	0.40
11	0.35	0.33
13	0.30	0.21
15≦n≦39 (odd harmonics only)	3.85/n	0.15x(15/n)

Limit for Class C equipment	
Harmonics Order n	Max. permissible harmonics current expressed as a percentage of the input current at the fundamental frequency A
2	2
3	30xF
5	10
7	7
9	5
11≦n<≦39 (odd harmonics only)	3
F is the circuit power factor	

Note: Class A, B, C and D are classified according to item 7.3.2.of this report

7.3.2. TEST PROCEDURES

The EUT was placed on the top of a wooden table 0.8 meters above the ground and operated to produce the maximum harmonic. The classification of EUT is according to section 5 of EN 61000-3-2.

The EUT is classified as follows:

Class A:

Balanced three-phase equipment, Household appliances excluding equipment as Class D, Tools excluding portable tools, Dimmers for incandescent lamps, audio equipment, equipment not specified in one of the three other classes.

Class B:

Portable tools; Arc welding equipment which is not professional equipment.

Class C:

Lighting equipment

Class D:

Equipment having a specified power less than or equal to 600 W of the following types: Personal computers and personal computer monitors and television receivers.

The correspondent test program of test instrument to measure the current harmonics emanated from EUT is chosen. The measure time shall be not less than the time necessary for the EUT to be exercised.

7.3.3. TEST SETUP

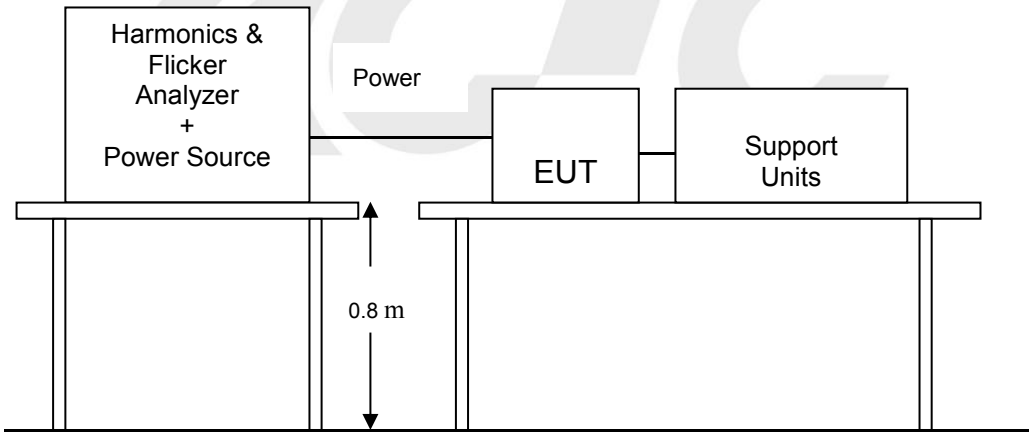

For the actual test configuration, please refer to the related item – Photographs of the Test Configuration.

7.3.4. TEST RESULT

Note: The rated power is less than or equal to 75W, Harmonic Current emission without applicable limit.

7.4. VOLTAGE FLUCTUATION AND FLICKS MEASUREMENT

7.4.1. LIMITS OF VOLTAGE FLUCTUATION AND FLICKS MEASUREMENT

TEST ITEM	LIMIT	REMARK
P_{st}	1.0	P_{st} means short-term flicker indicator.
P_{lt}	0.65	P_{lt} means long-term flicker indicator.
T_{dt} (ms)	500	T_{dt} means maximum time that dt exceeds 3 %.
d_{max} (%)	4/6/7 %	d_{max} means maximum relative voltage change.
dc (%)	3.3 %	dc means relative steady-state voltage change

7.4.2. TEST PROCEDURE

The EUT was placed on the top of a wooden table 0.8 meters above the ground and operated to produce the most unfavorable sequence of voltage changes under full load operating conditions.
During the flick measurement, the measure time shall include that part of whole operation cycle in which the EUT produce the most unfavorable sequence of voltage changes. The observation period for short-term flicker indicator is 10 minutes and the observation period for long-term flicker indicator is 2 hours.

7.4.3. TEST SETUP

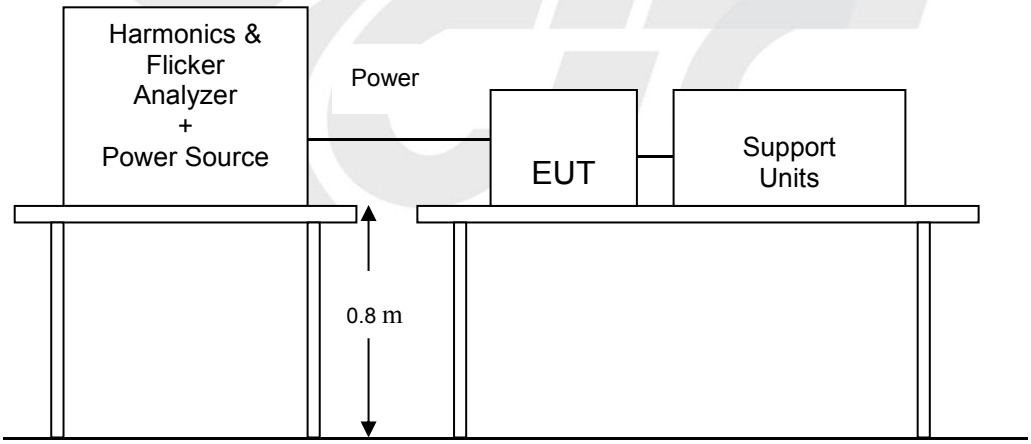

For the actual test configuration, please refer to the related item –Photographs of the Test Configuration.

7.4.4. TEST RESULT

Result Overview

Test Name	Test Result	Limit Usage	Info
dc Test [L1]	OK	1.8 %	0.1 % ≤ 3.3 %
dmax Test [L1]	OK	0.0 %	0.00 % ≤ 6.00 %
Pst Test [L1]	OK	3.6 %	0.036 ≤ 1.000
Plt Test [L1]	OK	5.5 %	0.036 ≤ 0.650
tmax Test [L1]	OK		

8. IMMUNITY TEST

8.1. GENERAL DESCRIPTION

Product Standard	EN 61000-6-1	
	Test Type	**Minimum Requirement**
Basic Standard, Specification, and Performance Criterion required	EN 61000-4-2	Electrostatic Discharge – ESD: ±8 kV air discharge, ±4 kV Contact discharge, Performance Criterion B
	EN 61000-4-3	Radio-Frequency Electromagnetic Field Susceptibility Test – RS: 80 MHz to 1 GHz, 3 V/m, 80 % AM(1 kHz), Performance Criterion A
	EN 61000-4-4	Electrical Fast Transient/Burst - EFT, Power line: ±1 kV, Signal line: ±0.5 kV, Performance Criterion B
	EN 61000-4-5	Surge Immunity Test: 1.2/50 μs Open Circuit Voltage, 8 /20 μs Short Circuit Current, Power Port ~ Line to line: ±1 kV, Line to ground: ±2 kV Signal Port : ±0.5 kV Performance Criterion B
	EN 61000-4-6	Conducted Radio Frequency Disturbances Test –CS: 0.15 ~ 80 MHz, 3 V r.m.s, 80 % AM, 1 kHz, Performance Criterion A
	EN 61000-4-8	Power frequency magnetic field immunity test 50 Hz, 1 A/m Performance Criterion A
	EN 61000-4-11	Voltage Dips: i) 0% reduction for 0.5 period, Performance Criterion B ii) 70% reduction for 25 periods, Performance Criterion C Voltage Interruptions: 0% reduction for 250 periods, Performance Criterion C

8.2. GENERAL PERFORMANCE CRITERIA DESCRIPTION

Criteria A:	During and after the test the EUT shall continue to operate as intended without operator intervention. No degradation of performance or loss of function is allowed below a minimum performance level specified by the manufacturer when the EUT is used as intended. The performance level may be replaced by a permissible loss of performance. If the minimum performance level or the permissible performance loss is not specified by the manufacturer, then either of these may be derived from the product description and documentation, and by what the user may reasonably expect from the EUT if used as intended.
Criteria B:	After the test, the EUT shall continue to operate as intended without operator intervention. No degradation of performance or loss of function is allowed, after the application of the phenomena below a performance level specified by the manufacturer, when the EUT is used as intended. The performance level may be replaced by a permissible loss of performance. During the test, degradation of performance is allowed. However, no change of operating state or stored data is allowed to persist after the test. If the minimum performance level (or the permissible performance loss) is not specified by the manufacturer, then either of these may be derived from the product description and documentation, and by what the user may reasonably expect from the EUT if used as intended.
Criteria C:	During and after testing, a temporary loss of function is allowed, provided the function is self-recoverable, or can be restored by the operation of the controls or cycling of the power to the EUT by the user in accordance with the manufacturer's instructions. Functions, and/or information stored in non-volatile memory, or protected by a battery backup, shall not be lost.

8.3. ELECTROSTATIC DISCHARGE (ESD)

8.3.1. TEST SPECIFICATION

Basic Standard:	EN 61000-4-2
Discharge Impedance:	330 Ω
Charging Capacity:	150 pF
Discharge Voltage:	Air Discharge: ±8 kV (Direct) Contact Discharge: ± 4 kV (Direct/Indirect)
Polarity:	Positive & Negative
Number of Discharge:	10 (Air discharge for single polarity discharge) 25 (Contact discharge for single polarity discharge)
Discharge Mode:	1 time/s
Performance Criterion:	B

8.3.2. TEST PROCEDURE

The discharges shall be applied in two ways:

a) Contact discharges to the conductive surfaces and coupling planes:
50 disAutomatic Collapsible Box Making Machines (25 with positive and 25 with negative polarity) shall be applied on each accessible metallic part of the enclosure, terminals are excluded. In case of a non-conductive enclosure, disAutomatic Collapsible Box Making Machines shall be applied on the horizontal or vertical coupling planes. Test shall be performed at a maximum repetition rate of one discharge per second.

b) Air discharges at slots and apertures and insulating surfaces:
On those parts of the EUT where it is not possible to perform contact discharge testing, the equipment should be investigated to identify user accessible points where breakdown may occur. Such points are tested using the air discharge method. This investigation should be restricted to those area normally handled by the user. A minimum of 10 single air discharges shall be applied to the selected test point for each such area.

The basic test procedure was in accordance with IEC 61000-4-2:

a) The EUT was located 0.1 m minimum from all side of the HCP (dimensions 1.6 m x 0.8 m).
b) The support units were located another table 30 cm away from the EUT, but direct support unit was/were located at same location as EUT on the HCP and keep at a distance of 10cm with EUT.

c) The time interval between two successive single discharges was at least 1 second.

d) Contact discharges were applied to the non-insulating coating, with the pointed tip of the

generator penetrating the coating and contacting the conducting substrate.

e) Air discharges were applied with the round discharge tip of the discharge electrode approaching the EUT as fast as possible (without causing mechanical damage) to touch the EUT. After each discharge, the ESD generator was removed from the EUT and re-triggered for a new single discharge. The test was repeated until all discharges were complete.

f) At least ten single discharges (in the most sensitive polarity) were applied at the front edge of each HCP opposite the center point of each unit of the EUT and 0.1 meter from the front of the EUT. The long axis of the discharge electrode was in the plane of the HCP and perpendicular to its front edge during the discharge.

g) At least ten single discharges (in the most sensitive polarity) were applied to the center of one vertical edge of the Vertical Coupling Plane (VCP) in sufficiently different positions that the four faces of the EUT were completely illuminated. The VCP (dimensions 0.5 m x 0.5 m) was placed vertically to and 0.1 meter from the EUT.

8.3.3. TEST SETUP

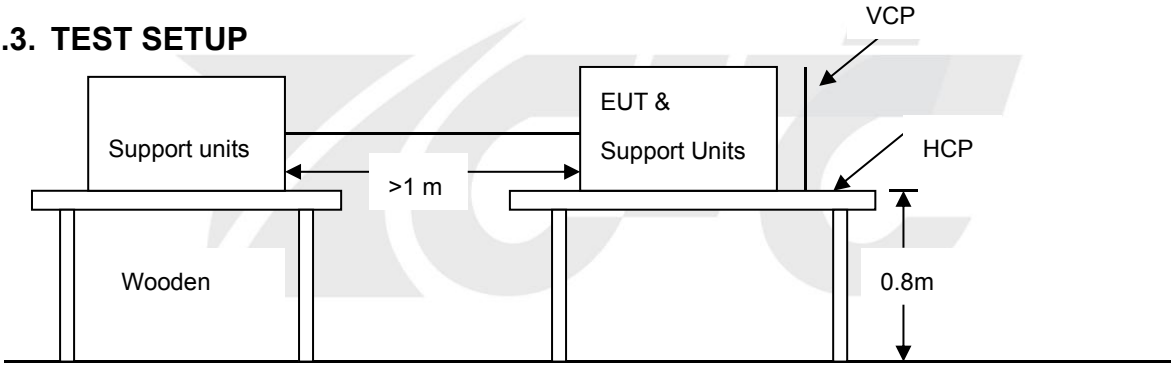

Ground Reference Plane

For the actual test configuration, please refer to the related item – Photographs of the Test Configuration.

Note:

1) TABLE-TOP EQUIPMENT

The configuration consisted of a wooden table 0.8 meters high standing on the ground reference plane (GRP) . The GRP consisted of a sheet of aluminum at least 0.25 mm thick, and 2.5 meters square connected to the protective grounding system. A horizontal coupling plane (HCP) (1.6 m x 0.8 m) was placed on the table and attached to the GRP by means of a cable with 940k total impedance. The equipment under test, was installed in a representative system as described in section 7 of EN 61000-4-2, and its cables were placed on the HCP and isolated by an insulating support of 0.5 mm thickness. A distance of 1-meter minimum was provided between the EUT and the walls of the laboratory and any other metallic structure.

2) FLOOR-STANDING EQUIPMENT

The equipment under test was installed in a representative system as described in section 7 of IEC 61000-4-2, and its cables were isolated from the ground reference plane by an insulating support of 0.1 meter thickness. The GRP consisted of a sheet of aluminum that is at least 0.25 mm thick, and 2.5 meters square connected to the protective grounding system and extended at least 0.5 meters from the

EUT on all sides.

8.3.4. TEST RESULT

Product	Socket	Environmental Conditions	24.1℃, 54.3 % RH, 101.3 kPa
Model	JXDA-05	Tested By	Yang
Test mode	Working	Test Result	Pass

Air Discharge					
Test Points	Test Levels	Results			
	± 8 kV	Pass	Fail	Observation	Performance Criterion
Gap	☒	☒	☐	Note ☐1☒2☐3	B

Contact Discharge					
Test Points	Test Levels	Results			
	± 4 kV	Pass	Fail	Observation	Performance Criterion
HCP 4 Points	☒	☒	☐	Note ☐1☒2☐3	B
VCP 4 Points	☒	☒	☐	Note ☐1☒2☐3	B

Note: 1) There was no change compared with initial operation during the test.
2) During the test the luminous intensity change, and after the test the luminous intensity can be restored to its initial value within 1 min.
3) During the test, the luminous intensity change and after the test the luminous intensity can return to normal within 30 min.

8.4. RADIATED, RADIO-FREQUENCY, ELECTROMAGNETIC FIELD (RS)

8.4.1. TEST SPECIFICATION

Basic Standard:	EN 61000-4-3
Frequency Range:	80 MHz ~ 1000 MHz
Field Strength:	3 V/m
Modulation:	1 kHz Sine Wave, 80 %, AM Modulation
Frequency Step:	1 % of preceding frequency value
Polarity of Antenna:	Horizontal and Vertical
Test Distance:	3 m
Antenna Height:	1.5 m
Performance Criterion:	A

8.4.2. TEST PROCEDURE

The test procedure was in accordance with EN 61000-4-3

a) The testing was performed in a fully anechoic chamber. The transmit antenna was located at a distance of 3 meters from the EUT.

b) The frequency range is swept from 80 MHz to 1000 MHz, with the signal 80% amplitude modulated with a 1 kHz sine-wave. The rate of sweep did not exceed 1.5×10^{-3} decade/s, where the frequency range is swept incrementally, the step size was 1 % of preceding frequency value.
c) The dwell time at each frequency shall be not less than the time necessary for the EUT to be able to respond.
d) The test was performed with the EUT exposed to both vertically and horizontally polarized fields on each of the four sides.

8.4.3. TEST SETUP

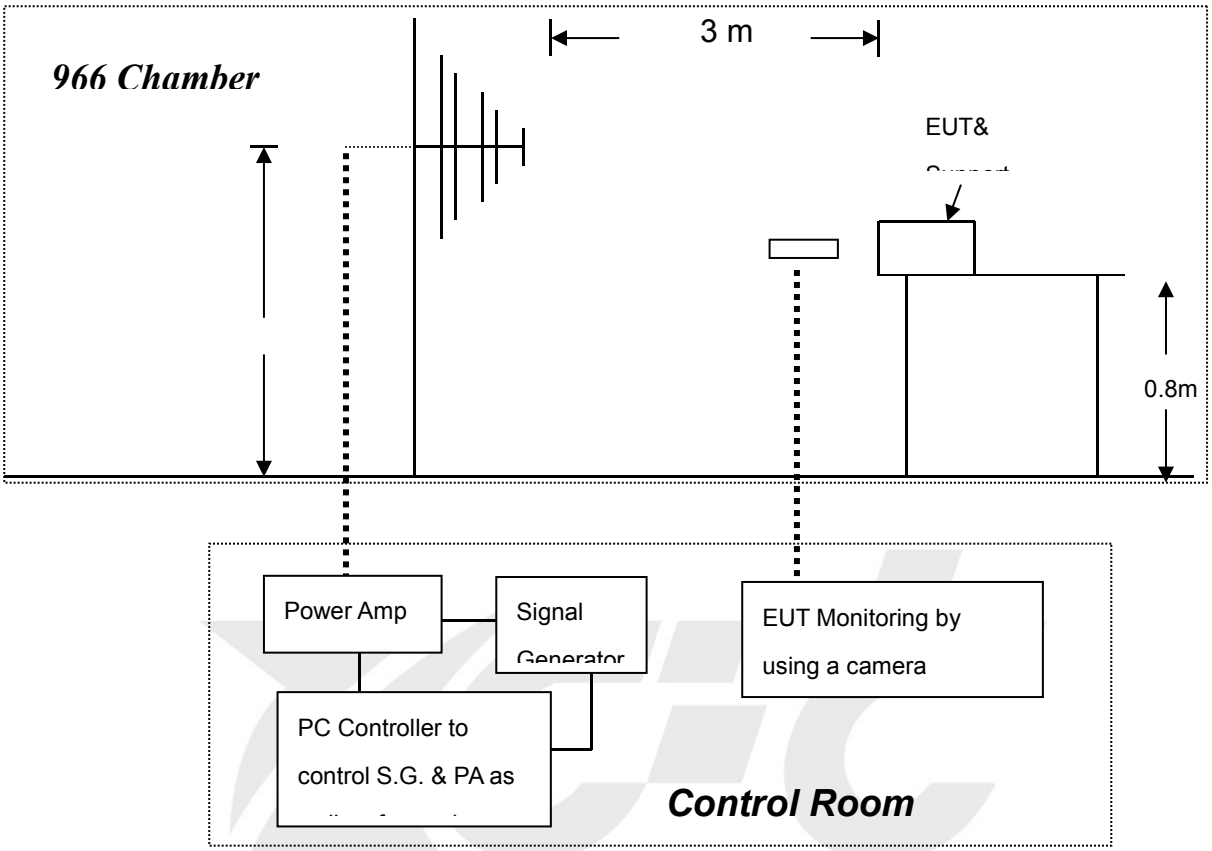

For the actual test configuration, please refer to the related item – Photographs of the Test Configuration.

Note:

TABLETOP EQUIPMENT

The EUT installed in a representative system as described in section 7 of EN 61000-4-3 was placed on a non-conductive table 0.8 meters in height. The system under test was connected to the power and signal wire according to relevant installation instructions.

FLOOR STANDING EQUIPMENT

The EUT installed in a representative system as described in section 7 of IEC 61000-4-3 was placed on a non-conductive wood support 0.1 meters in height. The system under test was connected to the power and signal wire according to relevant installation instructions.

8.4.4. TEST RESULT

N/A

8.5. ELECTRICAL FAST TRANSIENT (EFT)

8.5.1. TEST SPECIFICATION

Basic Standard:	EN 61000-4-4
Test Voltage:	Power Line: ±1 kV
	Signal/Control Line: ±0.5 kV
Polarity:	Positive & Negative
Impulse Frequency:	5 kHz
Impulse Wave-shape:	5/50 ns
Burst Duration:	15 ms
Burst Period:	300 ms
Test Duration:	2 mins
Performance Criterion:	B

8.5.2. TEST PROCEDURE

EUT is placed on a 0.1 m tall wooden table.

EUT operate at normal mode, the transient/burst was 5/50 ns in accordance with EN 61000-4-4, both positive and negative polarity burst waveform were applied.

The duration time of each test line was 2 minutes.

8.5.3. TEST SETUP

The EUT installed in a representative system as described in section 7 of EN 61000-4-4.

For the actual test configuration, please refer to the related item – photographs of the test configuration.

8.5.4. TEST RESULT

Product	Socket	Environmental Conditions	24.1℃, 54.3 % RH, 101.3 kPa
Model	JXDA-05	Tested By	Yang
Test mode	Working	Test Result	Pass

Test Point	Polarity	Test Level (kV)	Observation	Performance Criterion
L	+/-	1	Note ☐1 ☒2 ☐3	B
N	+/-	1	Note ☐1 ☒2 ☐3	B
L – N	+/-	1	Note ☐1 ☒2 ☐3	B
PE	+/-	1	Note ☐1 ☒2 ☐3	B
L – PE	+/-	1	Note ☐1 ☒2 ☐3	B
N – PE	+/-	1	Note ☐1 ☒2 ☐3	B
L – N – PE	+/-	1	Note ☐1 ☒2 ☐3	B
RJ45 UTP cable	--	--	N/A	N/A

Note: 1) There was no change compared with initial operation during the test.
2) During the test the luminous intensity change ,and after the test the luminous intensity can be restored to its initial value within 1 min.
3) During the test, the luminous intensity change and after the test the luminous intensity can return to normal within 30 min.

8.6. SURGE IMMUNITY TEST

8.6.1. TEST SPECIFICATION

Basic Standard:	EN 61000-4-5
Wave-Shape:	Combination Wave 1.2/50 μs Open Circuit Voltage 8/20 μs Short Circuit Current
Test Voltage:	Power Port ~ Line to line: ±1 kV, Line to ground: ± 2 kV
Surge Input/Output:	Power Line: L-N / L-PE / N-PE
Generator Source Impedance:	2 Ω between networks 12 Ω between network and ground
Polarity:	Positive/Negative
Phase Angle:	0° /90° /180° /270°
Pulse Repetition Rate:	1 time / min
Number of Tests:	5 positive polarity pulses, and 5 negative polarity pulses
Performance Criterion:	B

8.6.2. TEST PROCEDURE

EUT is placed on a 0.1 m (table type equipment) / 0.8 m (floor type equipment) tall wooden table.

EUT operate at normal mode, two types of combination wave generator (1.2/50 us open-circuit voltage and 8/20 us short-circuit current) are applied to the EUT power supply terminals via the capacitive coupling network.

The power cord between the EUT and the coupling/decoupling network shall not exceed 2 m in length.

8.6.3. TEST SETUP

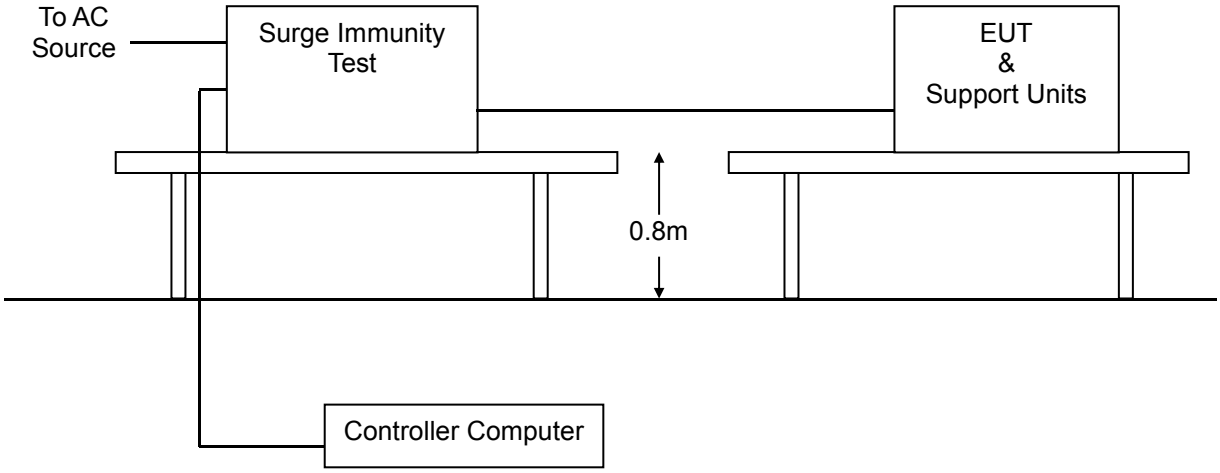

For the actual test configuration, please refer to the related item – Photographs of the Test Configuration.

8.6.4. TEST RESULT

Product	Socket	Environmental Conditions	24.1℃, 54.3 % RH, 101.3 kPa
Model	JXDA-05	Tested By	Yang
Test mode	Working	Test Result	Pass

Test Point	Polarity	Test Level (kV)	Observation	Performance Criterion
L - N	+/-	1	Note ☐1 ☒2 ☐3	B
L - PE	+/-	2	Note ☐1 ☒2 ☐3	B
N - PE	+/-	2	Note ☐1 ☒2 ☐3	B

Note: 1) There was no change compared with initial operation during the test.
2) During the test the luminous intensity change ,and after the test the luminous intensity can be restored to its initial value within 1 min.
3) During the test, the luminous intensity change and after the test the luminous intensity can return to normal within 30 min.

8.7. CONDUCTED RADIO FREQUENCY DISTURBANCES (CS)

8.7.1. TEST SPECIFICATION

Basic Standard:	EN 61000-4-6
Frequency Range:	0.15 MHz ~80 MHz
Field Strength:	3 V
Modulation:	1 kHz Sine Wave, 80 %, AM Modulation
Frequency Step:	1 % of preceding frequency value
Coupled cable:	Power Mains, Shielded
Coupling device:	CDN-M3/2 (3 wires/2 wires)
Performance Criterion:	A

8.7.2. TEST PROCEDURE

The EUT shall be tested within its intended operating and climatic conditions.
The test shall performed with the test generator connected to each of the coupling and decoupling devices in turn, while the other non-excited RF input ports of the coupling devices are terminated by a 50 Ω load resistor.
The frequency range was swept from 150 kHz to 80 MHz, using the signal level established during the setting process and with a disturbance signal of 80 % amplitude. The signal was modulated with a 1 kHz sine wave, pausing to adjust the RF signal level or the Automatic Collapsible Box Making Machine coupling devices as necessary. The sweep rate was 1.5 x 10^{-3} decades/s. Where the frequency range is swept incrementally, the step size was 1 % of preceding frequency value the dwell time of the amplitude modulated carrier at each frequency was 0.5 s.

8.7.3. TEST SETUP

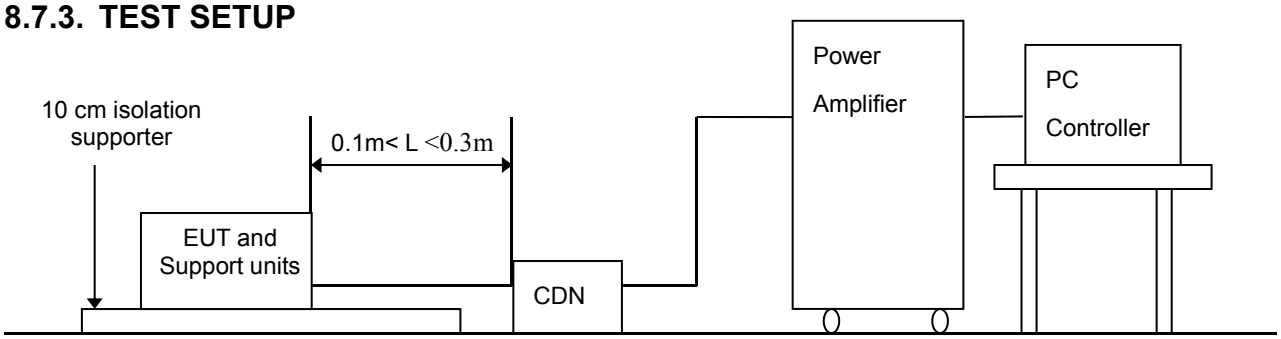

For the actual test configuration, please refer to the related item – Photographs of the Test Configuration

Note: 1) The EUT is setup 0.1 m above Ground Reference Plane

2) All relevant cables shall be provided with the appropriate coupling and decoupling devices at a distance between 0.1 meters and 0.3 meters from the projected geometry of the EUT on the ground reference plane.

8.7.4. TEST RESULT

Product	Socket	Environmental Conditions	24.1℃, 54.3 % RH, 101.3 kPa
Model	JXDA-05	Tested By	Yang
Test mode	Working	Test Result	Pass

Frequency (MHz)	Field Strength (Vrms)	Injected Position	Injection Method	Observation	Performance Criterion
0.15 ~ 80	3	AC Mains	CDN-M2/M3	Note ☒1☐2☐3	A

Note: 1) There was no change compared with initial operation during the test.
2) During the test the luminous intensity change ,and after the test the luminous intensity can be restored to its initial value within 1 min.
3) During the test, the luminous intensity change and after the test the luminous intensity can return to normal within 30 min.

8.8. POWER FREQUENCY MAGNETIC FIELD

8.8.1. TEST SPECIFICATION

Basic Standard:	EN 61000-4-8
Frequency Range:	50 Hz
Field Strength:	1 A/m
Observation Time:	5 minutes
Inductance Coil:	Rectangular type, 1 m x 1 m
Performance Criterion:	A

8.8.2. TEST PROCEDURE

The equipment is configured and connected to satisfy its functional requirements. It shall be placed on the GRP with the interposition of a 0.1 m-thick insulating support.

The equipment cabinets shall be connected to the safety earth directly on the GRP via the earth terminal of the EUT.

The power supply, input and output circuits shall be connected to the sources of power supply, control and signal.

The cables supplied or recommended by the equipment manufacturer shall be used. 1 meter of all cables used shall be exposed to the magnetic field.

8.8.3. TEST SETUP

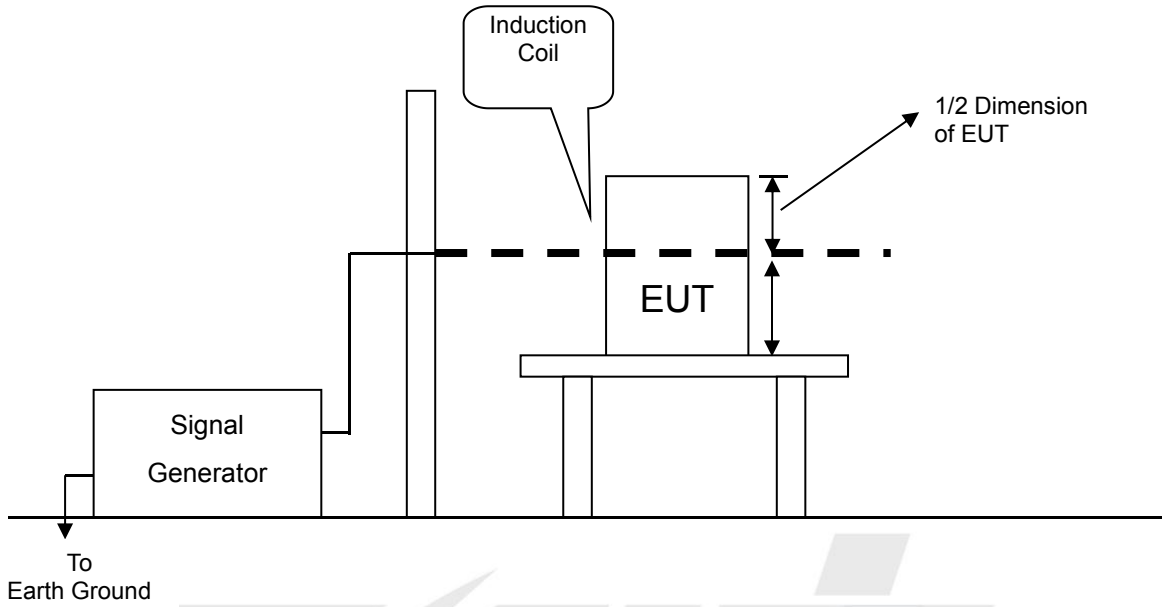

For the actual test configuration, please refer to the related item – Photographs of the Test Configuration
Note:

TABLETOP EQUIPMENT
The equipment shall be subjected to the test magnetic field by using the induction coil of standard dimension (1 m x 1 m). The induction coil shall then be rotated by 90 degrees in order to expose the EUT to the test field with different orientations.

FLOOR-STANDING EQUIPMENT
The equipment shall be subjected to the test magnetic field by using induction coils of suitable dimensions. The test shall be repeated by moving and shifting the induction coils, in order to test the whole volume of the EUT for each orthogonal direction. The test shall be repeated with the coil shifted to different positions along the side of the EUT, in steps corresponding to 50 % of the shortest side of the coil. The induction coil shall then be rotated by 90 degrees in order to expose the EUT to the test field with different orientations.

8.8.4. TEST RESULT

Product	Socket	Environmental Conditions	24.1℃, 54.3 % RH, 101.3 kPa
Model	JXDA-05	Tested By	Yang
Test mode	Working	Test Result	Pass

Antenna aspect	Duration (min)	Field Strength (A/m)	Observation	Performance Criterion
X	5 min	1	Note ☒1 ☐2 ☐3	A
Y	5 min	1	Note ☒1 ☐2 ☐3	A
Z	5 min	1	Note ☒1 ☐2 ☐3	A

8.9. VOLTAGE DIP & VOLTAGE INTERRUPTIONS

8.9.1. TEST SPECIFICATION

Basic Standard:	EN 61000-4-11
Test Duration Time:	3 test events in sequence
Interval Between Event:	10 seconds
Phase Angle:	0°
Test Cycle:	3 times
Performance Criterion:	0% U_T / 0.5 P, Criterion: B
	70% U_T / 25 P, Criterion: C
	0% U_T / 250 P, Criterion: C

8.9.2. TEST PROCEDURE

The EUT and support units were located on a wooden table, 0.8 m away from ground floor.

Setting the parameter of tests and then perform the test software of test simulator.

Changes to the voltage level shall occur at 0 degree crossing point in the a.c. voltage waveform.

Record the test result in test record form.

8.9.3. TEST SETUP

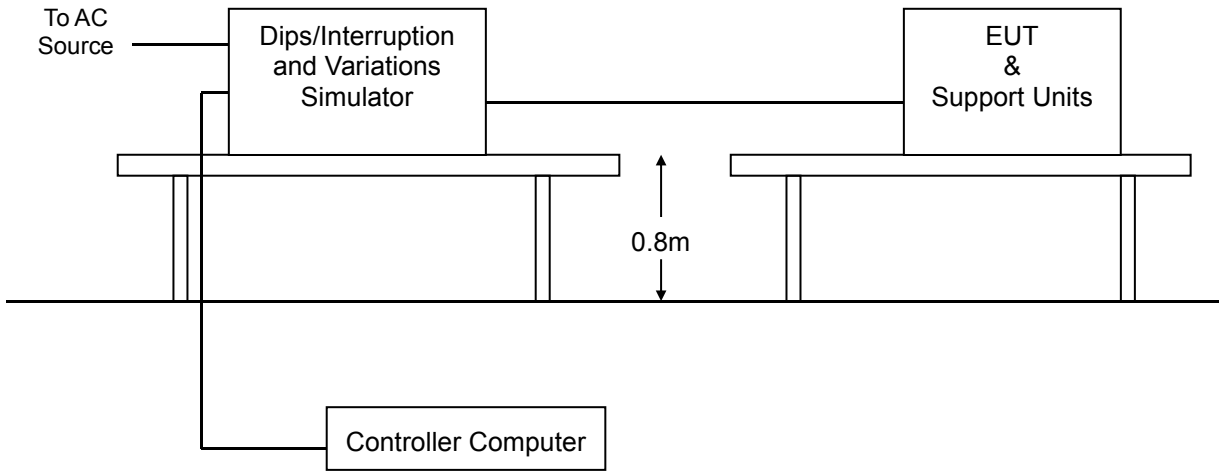

For the actual test configuration, please refer to the related item – Photographs of the Test Configuration.

8.9.4. TEST RESULT

Product	Socket	Environmental Conditions	24.1℃, 54.3 % RH, 101.3 kPa
Model	JXDA-05	Tested By	Yang
Test mode	Working	Test Result	Pass

Test Power: 230 Vac, 50 Hz			
Voltage (% Reduction)	Duration (Period)	Observation	Performance Criterion
100	0.5 P	Note ☐1 ☒2 ☐3	B
30	25 P	Note ☐1 ☐2 ☒3	C
100	250 P	Note ☐1 ☐2 ☒3	C

Note: 1) There was no change compared with initial operation during the test.
2) During the test the luminous intensity change ,and after the test the luminous intensity can be restored to its initial value within 1 min.
3) During the test, the luminous intensity change, and after the test the luminous intensity can return to normal within 30 min.

9. PHOTOGRAPHS OF EUT

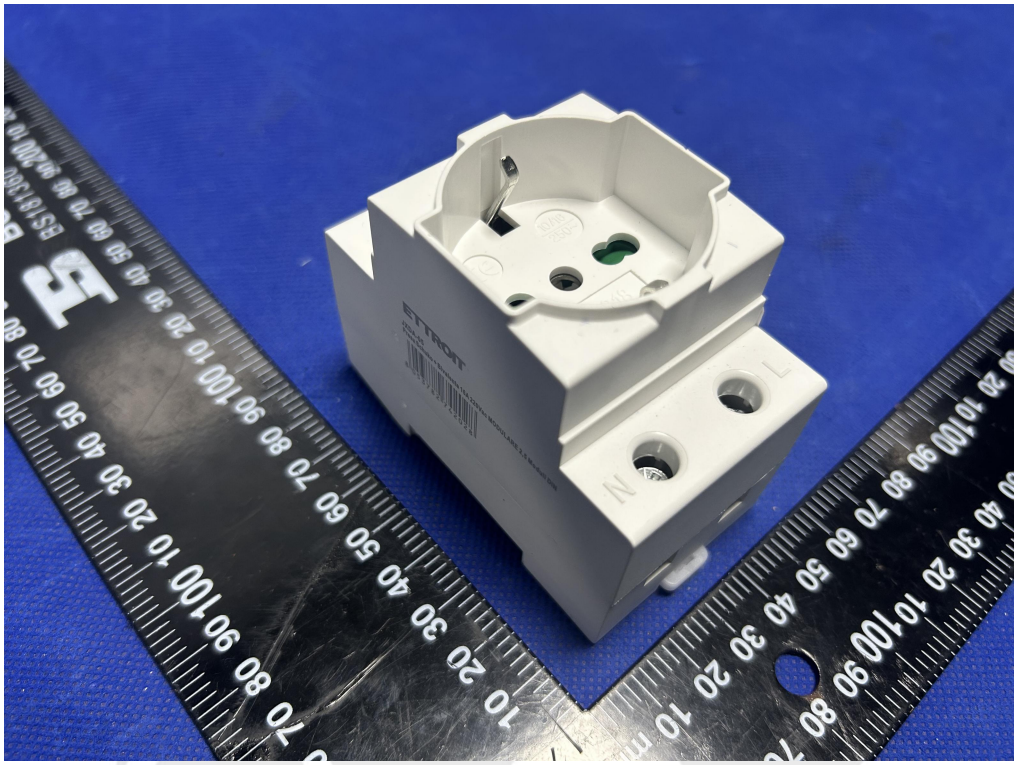

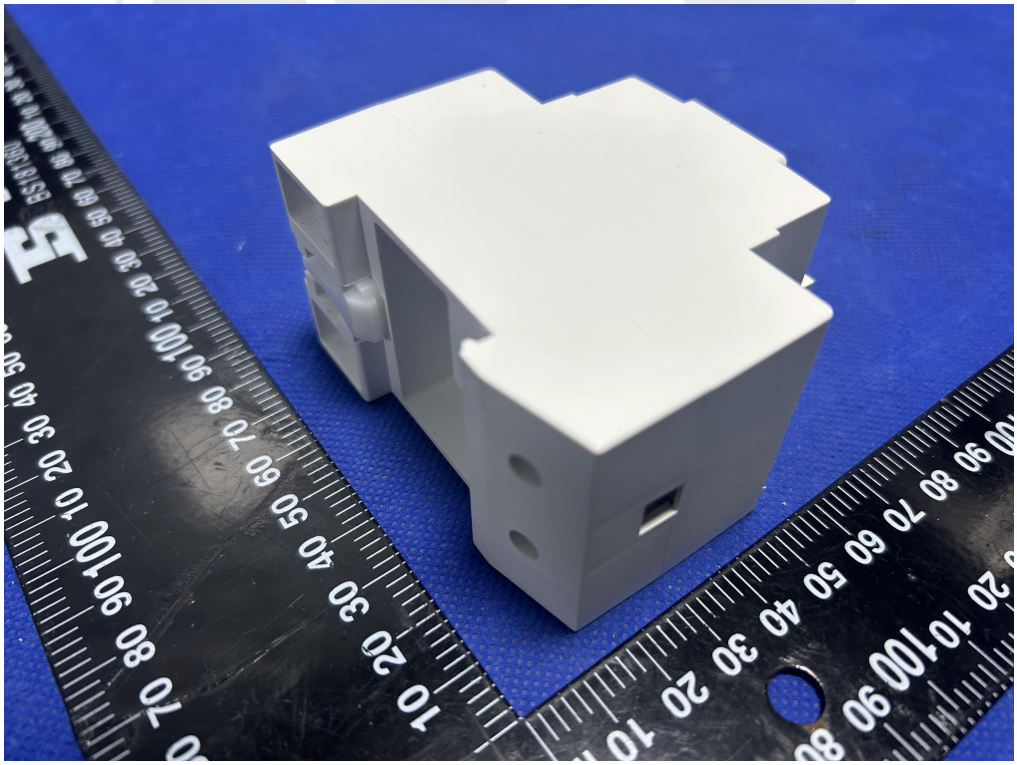

— End of report —